A SunCam online continuing education course

Introduction to Gear Technology

by

Robert P. Tata

Robertptata@aol.com

Introduction to Gear Technology

A SunCam online continuing education course

Table of Contents

Subject	Page
Introduction	3
Figure 1	3
Terminology	4
Figure 2	6
Figure 3	7
Types of Gears	7
Figure 4	10
Figure 5	11
Manufacture	11
Tooth Bending	14
Figure 6	15
Tooth Pitting	16
Performance Upgrades	17
Figure 7	20
Gear Mounting	20
Figure 8	22
Application	23
Figure 9	24
Figure 10	25
Figure 11	26
Figure 12	27
Appendix I	28
Appendix II	30

Introduction to Gear Technology

A SunCam online continuing education course

Introduction

Gears are round, wheel-like machine elements with teeth equally spaced around the outer periphery. They are mounted on rotatable shafts with the teeth on one gear engaging (meshing) with the teeth on another gear. They are used to transmit rotational motion (rpm) and force (torque) from one part of a machine to another. They have been in existence for thousands of years and are used in everything from watches to wind turbines. By changing the diameter of one gear with respect to another, they can be designed to regulate rpm and torque. A gear that is driven by a smaller gear 3/4 its size will rotate at 3/4 the speed of the drive gear and deliver 4/3 the torque. See figure 1. This principle is exhibited in the transmission of an automobile where various sized gears are used to control vehicle motion.

Figure 1

Gears Delivering Motion (rpm)
And Force (in-lbs)

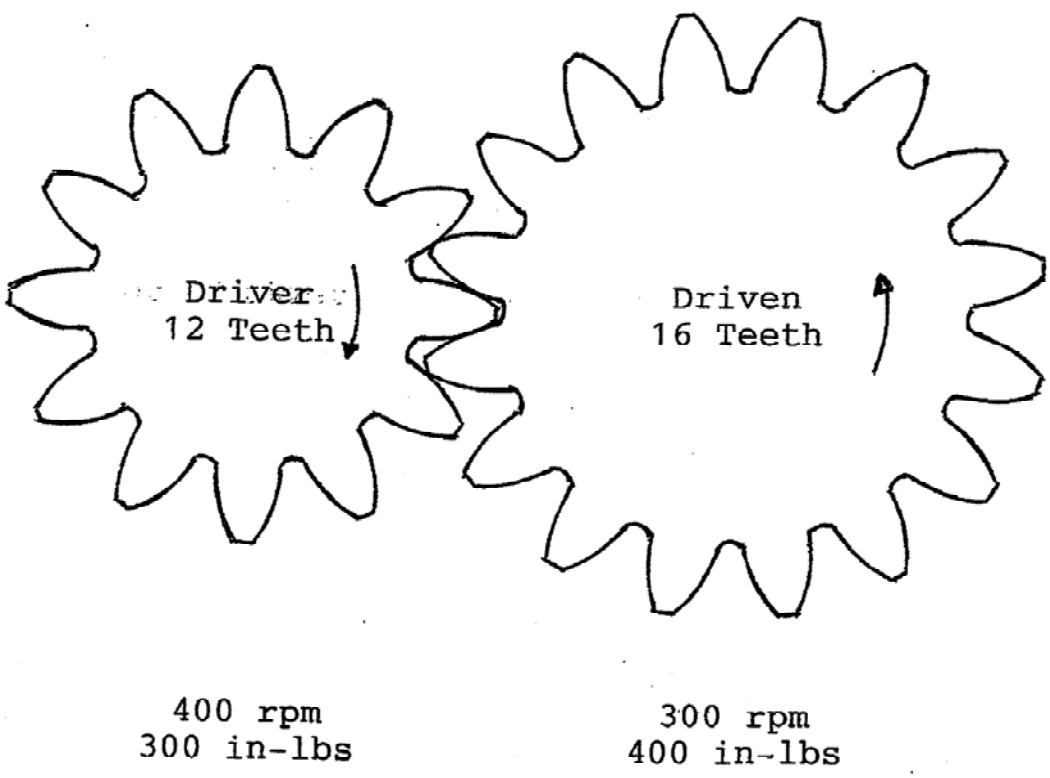

Terminology

The following terms are associated with gears (See Figure 2):

•Pinion is the smaller of two gears in mesh. The larger is called the gear regardless of which one is doing the driving.

•Ratio is the number of teeth on the gear divided by the number of teeth on the pinion.

•Pitch Diameter is the basic diameter of the pinion and gear which when divided by each other equals the ratio.

•Diametrical Pitch is a measure of tooth size and equals the number of teeth on a gear divided by the pitch diameter in inches. Diametrical pitch can range from 1/2 to 200 with the smaller number indicating a larger tooth. See figure 3.

•Module is a measure of tooth size in the metric system. It equals the pitch diameter in millimeters divided by the number of teeth on a gear. Module equals 25.400 divided by the diametral pitch. Module can range from 0.2 to 50 with the smaller number indicating a smaller tooth.

•Pitch Circle is the circumference of the pitch diameter.

•Circular Pitch is the distance along the pitch circle from a point on one gear tooth to the same point on an adjacent gear tooth.

•Addendum of a tooth is its radial height above the pitch circle. The addendum of a standard proportion tooth equals 1.000 divided by the diametral pitch. The addendum of a pinion and mating gear are equal except for the long addendum design where the pinion addendum is increased while the gear addendum is

decreased by the same amount.

•Dedendum of a tooth is its radial depth below the pitch circle. The dedendum of a standard proportion tooth equals 1.250 divided by the diametral pitch. The dedendum for a pinion and mating gear are equal except in the long addendum design where the pinion dedendum is decreased while the gear dedendum is increased by the same amount.

•Whole Depth or total depth of a gear tooth equals the addendum plus the dedendum. The whole depth equals 2.250 divided by the diametral pitch.

•Working Depth of a tooth equals the whole depth minus the height of the radius at the base of the tooth. The working depth equals 2.000 divided by the diametral pitch.

•Clearance equals the whole depth minus the working depth. The clearance equals the height of the radius at the base of the tooth.

•Pressure Angle is the slope of the tooth at the pitch circle.

Figure 2

Gear Tooth Terminology

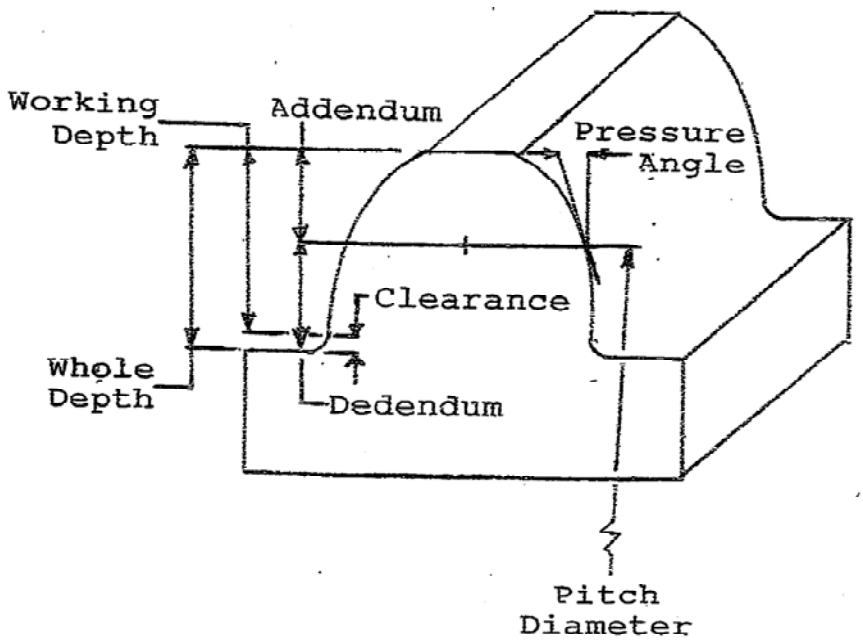

Dimensions For a 2 Diametral Pitch Tooth:

Addendum	= 1.00/2	= 0.500	inches
Dedendum	= 1.25/2	= 0.625	inches
Clearance	= 0.25/2	= 0.125	inches
Whole Depth	= 2.25/2	= 1.125	inches
Working Depth	= 2.00/2	= 1.000	inches

Figure 3

Gear Teeth Relative Size (.6 scale)

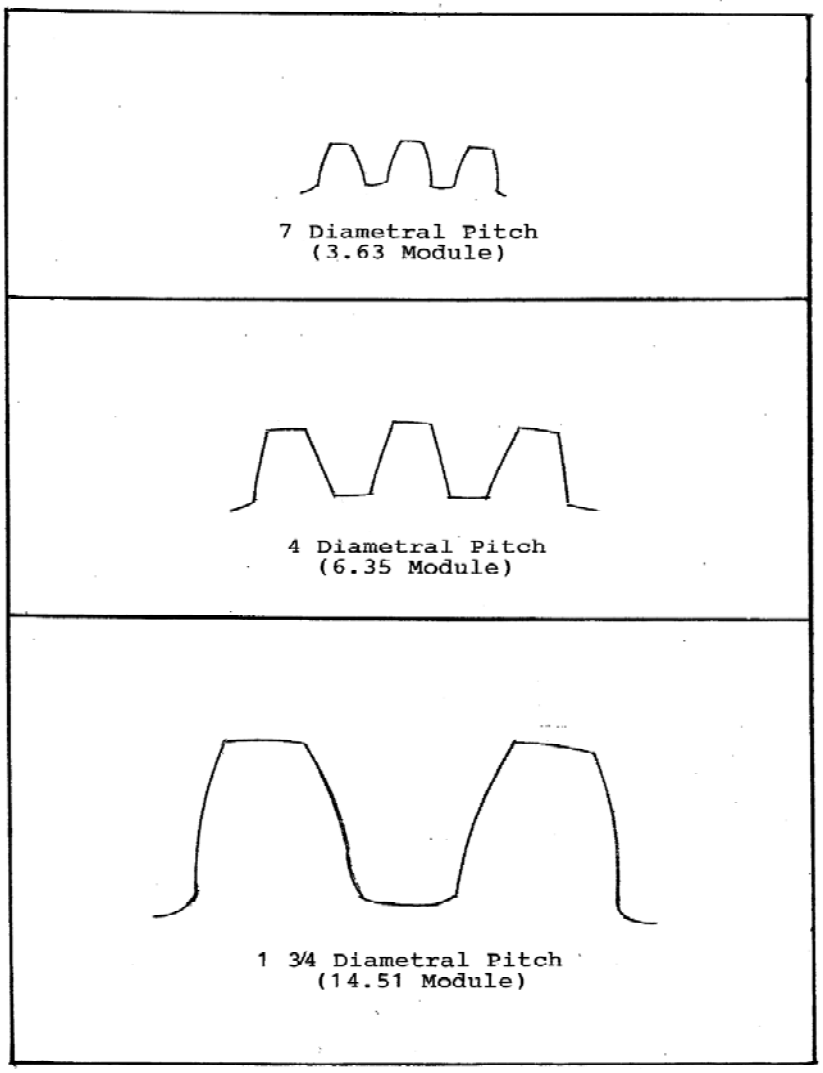

Types of Gears

Four basic types of gears are spur gears, helical gears, bevel gears, and spiral bevel gears. See figure 4. A spur gear has teeth that are aligned parallel to the axis of the gear and are designed to engage (mesh) with another spur gear on

a parallel shaft. They impose only radial (perpendicular to axis) loads on the shaft. They are the most commonly used of all types. There are a number of different ways to machine and finish spur gears making them the most economical choice.

The cross-sectional (normal) shape of each of the two faces of spur gears is in the form of an involute curve. An involute curve is the shape generated by the end of a string that is unwound from a cylinder as shown on the sketch at the top of figure 5. The sketch at the bottom of figure 5 shows the "line of action" of two engaging teeth. The line of contact is the path taken by the point of contact between the two teeth from the start of contact to the end of contact. The line of action is tangent to the base circle (cylinder) of each gear. Contact is first made near the base of the drive gear and near the tip of the driven gear. As the contact progresses along the line of action, the contact moves to the tip of the drive gear and to the base of the driven gear. This action is in the direction of unwinding the involute string of the driving gear from the cylinder (base circle) and, at the same time, winding the involute string around the cylinder of the driven gear. It results in more rolling and less sliding between engaging teeth and produces a constant angular velocity. The efficiency of spur gears is in the high 90% range which approaches that of anti-friction bearings. In most cases, at the beginning and end of contact, there is a second pair of teeth in engagement sharing the load. Near the center of contact, there is only one set of teeth in engagement. If there were only one set of teeth making contact over the entire line of action, full load would be taken near the tip of both the drive and driven gears which would shorten the life of the gearset. The average number of teeth in engagement at any one time is called the "contact ratio". A contact ratio of 1.5 does not infer that there are one and one-half teeth in engagement at any one time. It indicates that, on the average, there are between one and two teeth in engagement at any one time.

Helical gears are like spur gears except that instead of the teeth being parallel to the gear axis, they are aligned across the outer surface of the gear at an angle to the gear axis as shown in figure 4. This angle is called the helix angle and normally runs from 10° to 30°. They are usually made with the involute profile in the transverse section (perpendicular to the gear axis). With spur gears, the mating teeth mesh along their entire width instantaneously. With helical gears, the contact begins at one end of the tooth and then traverses diagonally across the width of the tooth to the other end. Because of this, helical gears run smoother and quieter than spur gears and can carry a higher load. Because the teeth mesh across a diagonal line, helical gears impose both radial and thrust loads on the shaft. This can be eliminated by mounting two helical gears together with the teeth opposing each other ("double helical" or "herringbone").

Bevel gears are used to transmit rotation between two shafts that are perpendicular to each other as shown in figure 4. Bevel gear teeth are conical in shape. Bevel gears, like spur gears, operate at efficiencies in the high 90% range. Bevel gears with angled teeth are called spiral bevel gears. Spiral bevel gears are to bevel gears as helical gears are to spur gears. Spiral bevel gears whose axes do not intersect are called hypoid gears. Hypoid gears are used in rear drive axles of automobiles to lower the drive shaft and allow more passenger space.

Figure 4

Types of Gears

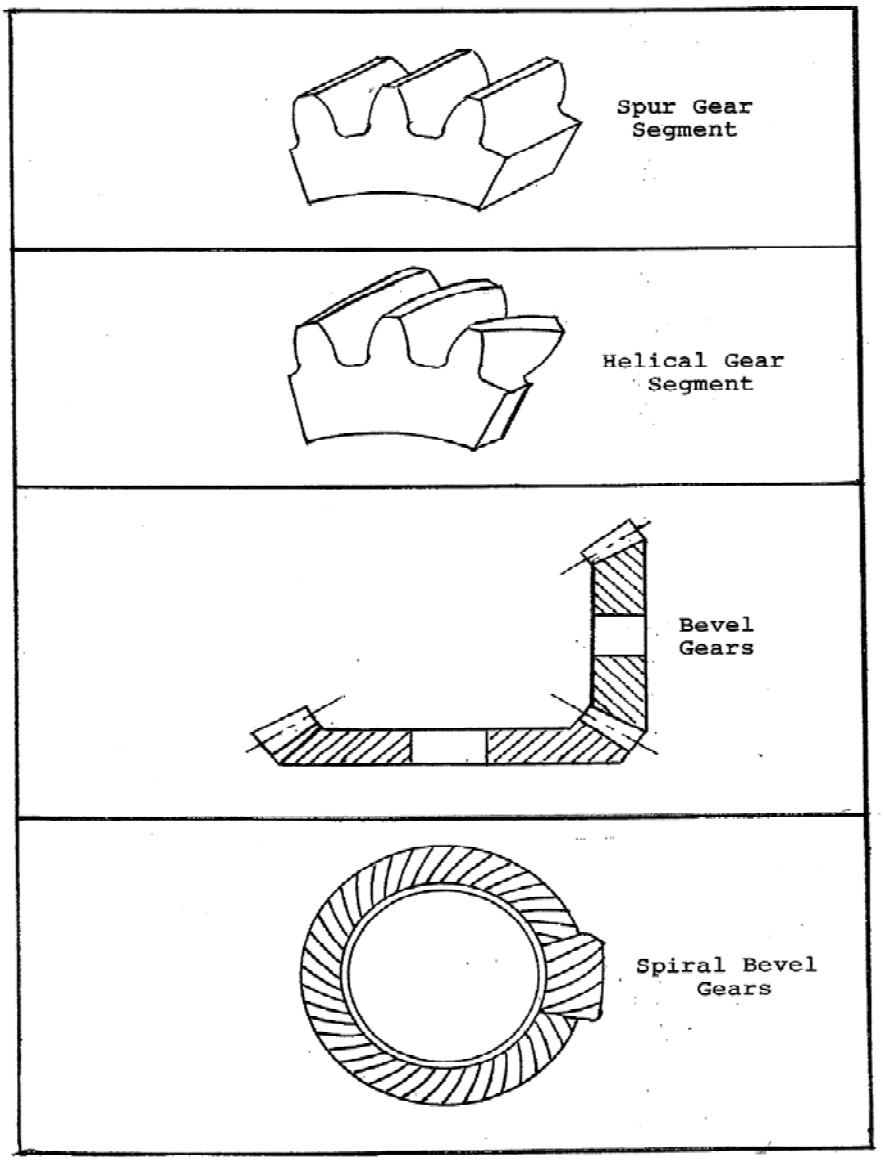

Figure 5

Shape of Gear Teeth

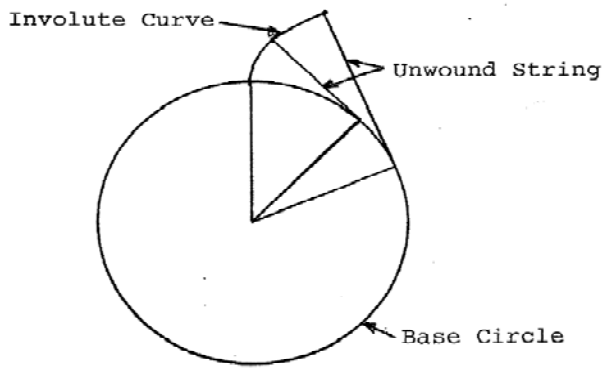

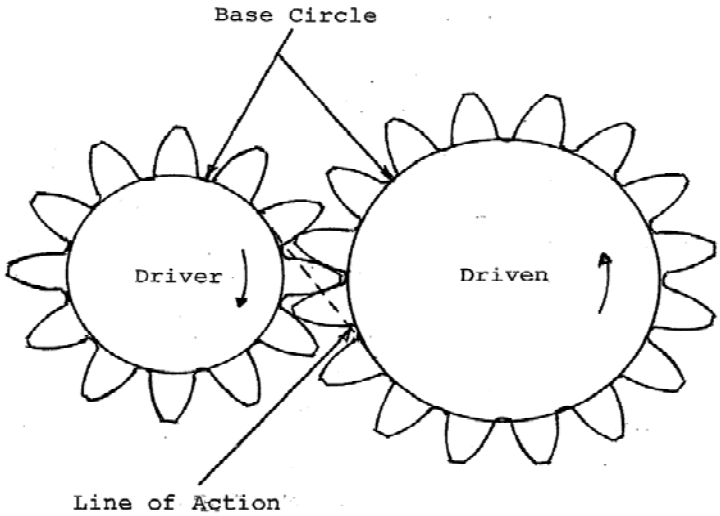

Manufacture

Steel is the most widely used gear material. The type used depends on load, size, and cost considerations. Low carbon, low alloy steels are used when low cost is of prime importance. High carbon, high alloy grades are used when small size and high load are the major design objectives.

Steel gears can be heat treated to improve performance by increasing strength and wear properties. Some alloys are thru-hardened to the Rockwell C42 level, while others are carburized and hardened to the Rockwell C60 level on the outer shell while leaving the inner core softer. This hardening technique called case-hardening imparts good strength and wear properties to the outer layer while the softer inner core gives good shock absorbing characteristics.

Gear steels come in grades 1, 2, and 3. Higher grade numbers represent higher quality steels used for higher performing gears. There are many metallurgical factors that are controlled in determining the three grades of steel*. The maximum bending stress for case-hardened gear teeth is 55,000 psi for grade 1 steel, 65,000 psi for grade 2 steel, and 75,000 psi for grade 3 steel. The maximum contact stress for case-hardened gear teeth is 180,000 psi for grade 1 steel, 225,000 psi for grade 2 steel and 275,000 psi for grade 3 steel (bending stress and contact stress explained later).

Gear cutting processes can be classified as either generating or forming. The generating method involves moving the tool over the work piece in such a way as to create the desired shape. In the forming process, the shape of the tool is imparted on the work piece. A generating method of cutting gear teeth that is commonly used is called hobbing. A hob is a thread-like tool with a series of slots machined across it to provide cutting surfaces. The tool can be fed across, tangentially, along, or radially into the gear blank developing several teeth at the same time. Forming methods of gear cutting include shaping and milling. Shaping uses a gear-like tool that is reciprocated up and down to impart its tooth form to the gear blank. Milling uses a rotating shaped tool to remove the material between the gear teeth.

After cutting, some gears are heat treated to increase strength and wearability.

*ANSI/AGMA 2001-D04

This process causes a small amount of distortion. In order to restore good tooth accuracy and surface finish, heat treating is followed by a finishing operation. For gears that are heat treated to a hardness level of RC42, a finishing operation called shaving is performed. Shaving is similar to shaping except that the tool teeth are grooved to provide additional cutting edges to remove only a small amount of material. For gears that are heat treated to a hardness level over RC42, grinding is used as the finishing operation. Grinding can be either a generating or forming method of finishing gears. The generating method passes an abrasive wheel over the gear teeth in a prescribed manner to true up the teeth and produce a fine surface finish. The forming method feeds a shaped wheel between the gear teeth similar to milling.

Gears can be manufactured over a very large size range. They can be from a fraction of an inch in diameter to many feet in diameter. Gear tooth height can range from .001 inch (200 diametral pitch) to 4.31 inches (1/2 diametral pitch). Metric tooth height ranges from .431 millimeters ((0.2 module) to 107.85 millimeters (50 module).

Gear teeth are normally manufactured with pressure angles of 14.5^{o}, 20°, or 25°. As the pressure angle is made larger, the teeth become wider at the base and narrower at the tip. This makes the tooth stronger and able to carry more load but more apt to chip at the tip if not properly designed. Pinions with higher pressure angles can be made with fewer teeth because of there being less danger of undercutting. Undercutting is an undesirable narrowing of the base of the teeth when being manufactured. Lower pressure angle teeth have a narrower base and carry less load than higher pressure angle teeth but the teeth are wider at the tip and less apt to chip. Finally, lower pressure angle teeth run more smoothly and quieter than higher pressure angle teeth because of having higher contact ratios.

Tooth Bending

Wilfred Lewis calculated gear tooth strength in 1892. He was the first to treat the gear tooth as a cantilever beam. He conceived the idea of inscribing the largest parabola that would fit inside a gear tooth. Using the cantilever beam equation he then calculated the stress which is a constant all along the contour of a parabola. The weakest part of the tooth is where the parabola is tangent to the surface of the gear tooth. This point occurs near where the involute curve meets the fillet radius. See figure 6. The magnitude and location of the maximum stress on the tooth are now known. The American Gear Manufacturers Association (AGMA) bases their gear tooth bending stress power rating equation on the work of Lewis*. As a sample problem It will be used to evaluate a gearset with the pinion having 35 teeth and the gear having 55 teeth. The diametral pitch will be 7. The pressure angle will be 14.5^{o}. For the sake of brevity, the equation modifying factors are all assumed to be 1. In actual practice, they must be used. The resulting AGMA equation transposed down to one line is as follows:

$$P_{at} = (\pi\, n_p d\, FJ\, s_{at}) / (396{,}000\, P_d)$$

P_{at} is the tooth bending strength allowable transmitted horsepower for 10 million cycles of operation at 99% reliability. π is a constant and equals 3.142. n_p is the pinion speed which will be assumed to be 1000 rpm. d is the pinion pitch diameter which equals 5.000 inches (35/7). F is the face width and, as a general rule of thumb, equals d. J is the tooth geometry factor which from AGMA** equals .30 for the pinion and .31 for the gear. The .30 value for the pinion will be used since it is the more conservative number. s_{at} is the allowable bending stress and from AGMA* equals 55,000 psi for case-hardened grade 1 steel. P_d is the diametral pitch of the teeth and, as stated, equals 7 (relative size shown at the top of Figure 3).

$$P_{at} = (3.142 \times 1000 \times 5.00 \times 5.00 \times .30 \times 55{,}000)/(396{,}000 \times 7) = 468\text{hp}$$

*ANSI/AGMA 2001-D04, **AGMA 908-B89

Figure 6

Gear Teeth Bending Stress

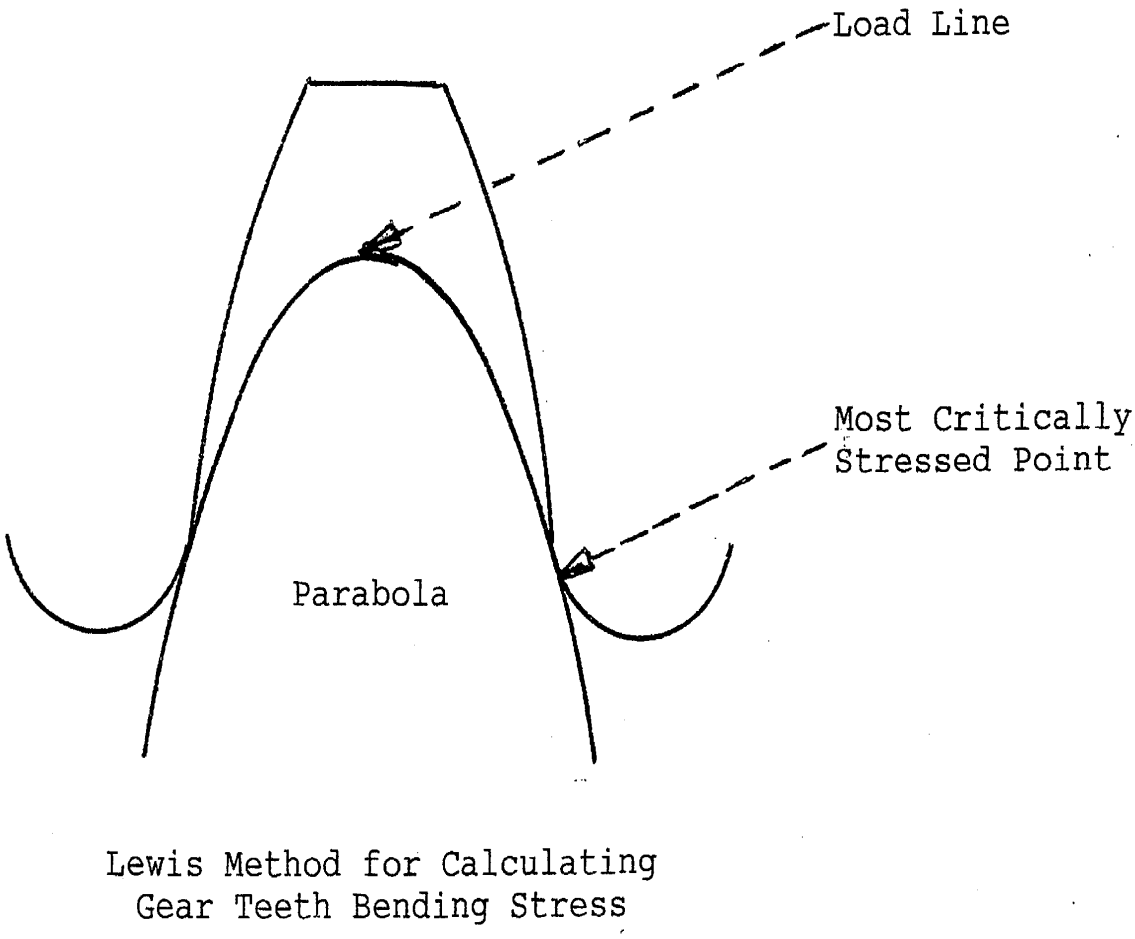

Tooth Pitting

The stress on the surface of gear teeth is based on the work of German physicist Heinrich Hertz. He determined the stress and shape of the contact pattern between various geometric shapes. Of interest for gear work is the stress and contact pattern between two parallel cylinders which simulate the condition existing between two mating gear teeth. The American Gear Manufacturers Association bases their gear pitting resistance power rating equation on the work of Hertz*. As a sample problem, it will be used to evaluate the same gearset that was used in the gear tooth bending example. Again the equation modifying factors are assumed to be 1. The AGMA equation transposed down to one line is as follows:

$$P_{ac} = (\pi\, n_p F\, I / 396{,}000)\, (d\, s_{ac} / C_p)^2$$

P_{ac} is the pitting resistance allowable transmitted horsepower for ten million cycles of operation at 99% reliability. π is a constant and equals 3.142. n_p is the pinion speed which will be assumed to be 1000 rpm. F is the face width of the gears and equals 5.000 inches. I is the geometry factor for pitting resistance which from AGMA equals .074**. d is the pinion pitch diameter which also equals 5.000 inches. s_{ac} is the allowable contact stress and from AGMA equals 180,000 psi for case-hardened grade 1 steel*. C_p is the elastic coefficient and from AGMA equals 2300 $(psi)^{.5}$ for a steel pinion and gear*.

$$P_{ac} = (3.142 \times 1000 \times 5 \times .074/396{,}000)\, (5 \times 180{,}000/2300)^2 = 450 \text{ hp.}$$

It can be seen when comparing tooth bending (468 hp) to tooth pitting (450 hp) that the gearset is slightly weaker in tooth pitting and therefore, tooth pitting, being the more conservative number, shall be used as the gearset design rating. It will be shown in the next section how simple changes can be made to increase the pinion horsepower ratings in both tooth pitting and tooth bending.

* ANSI/AGMA 2001-D04, **AGMA 908-B89

Performance Upgrades

Gears and bearings are prime components that are used together to deliver motion and power in mechanical drive systems. In these systems, if a bearing is not adequate in fulfilling design requirements, it is usually replaced with a larger bearing. If a gear is not adequate, the engineer has options that he can chose from that will upgrade the performance of the gear without having to change the basic size or shape. Following are some of the options that will increase the allowable transmitted horsepower of the gearset in the previous example: (Calculations shown on page 36 as Appendix I).

- As previously mentioned, higher pressure angle gear teeth are wider at the base making them stronger than lower pressure angle teeth. The previous bending and pitting equations were calculated using 14.5^{o} pressure angle teeth. Now the same bending and pitting calculations will be made using a 25° pressure angle gearset. When this is done, the only items that change in the allowable transmitted horsepower equations are the tooth geometry factors for both bending and pitting. (Important parameters that go into calculating the tooth geometry factor for bending are the shape of the tooth and the position of the load. Important parameters that go into the tooth geometry factor for pitting are the radius of curvature of the pinion and gear at the point of contact). When the calculation is made for 25° teeth, the bending horsepower is increased by 57% and the pitting horsepower is increased by 51% over the original 14.5^{o} pressure angle baseline design. The higher pressure angle design shows significant gains in horsepower with the gains in bending being slightly higher than the gains in pitting.

- Normally in a gearset, the pinion is weaker than the gear. In order to equalize the strength of the two, a tooth modification called "long addendum" is used. In the long addendum design, the pinion addendum is

increased while the gear addendum is decreased by the same amount. This increases the pinion teeth bending strength and reduces the stress that causes pitting failures. In the previous examples, the gearset incorporated the 100% standard length pinion and gear addenda. Now the same equations will be used for the 150**%** long addendum design. Again, the only item that changes in the equation is the tooth geometry factor for both bending and pitting. The 150% addendum design yields a tooth bending horsepower rating increase of 30% and a tooth pitting horsepower increase of 5%. It can be seen that the long addendum horsepower increases are not as great as the pressure angle increases and are very low in pitting. Since the long addendum tooth modification is easy to accommodate in manufacturing, it is a convenient engineering design tool to use especially when increases in bending horsepower are needed more than increases in pitting horsepower. Although it can be used in this gearset, it cannot be used in all applications because of the teeth becoming too pointed and prone to chipping especially with higher pressure angle pinions with a lower number of teeth.

- The preceding examples were calculated using grade 1 steel. Now the equations will be mad**e** for the higher grade 3 steel. The only items that change in the equation are the allowable bending stress which is 55,000 psi for case-hardened grade 1 steel and 75,000 psi for case-hardened grade 3 steel and the allowable contact stress for pitting which is 180,000 psi for case-hardened grade 1 steel and 275,000 psi for case-hardened grade 3 steel. Grade 3 steel yields gains of 36% for bending and 133% for pitting over the original grade 1 baseline design. The high pitting gains are attributed to the large increase in the allowable contact stress numbers listed above which are taken to the second power in the equation. It can be seen that the grade of steel is a very important factor in the performance of gears. The items that are controlled in determining the grade of steel are material composition, cleanliness, residual stress, microstructure,

quality, heat treatment, and process practices*.

Figure 7 has the horsepower ratings for all the above percent increases. The pressure angle and long addendum options can be made with simple manufacturing tooling changes while the higher grade number steel substitutes will be more costly. Of the first 6 items listed on figure 7, the 25° pressure angle option is shown to be the one with the longest calculated life because the lower of its two numbers (681) is higher than the lower number of the other 5 options. When considering all the 8 options listed on figure 7, the 25° pressure angle option with 150% addendum and grade 3 steel provides the highest minimum rating calculated horsepower for both bending and pitting (1190) but requires both tooling changes and higher quality steel for the gear.

Another consideration in the design of a gearset is the "hunting ratio". A hunting ratio is the ratio which ensures that any tooth in one member will contact, in time, all the teeth on the mating part. This tends to equalize wear and improve tooth spacing especially with lower hardness steel. The test for a hunting ratio is that the number of teeth in the pinion and, separately, the number of teeth in the gear, cannot be divided by the same number, excluding 1. The number of teeth in the sample problem of 35 and 55 is not a hunting ratio because both numbers can be divided by 5. A hunting ratio can be accomplished with just a minor variance by changing the number of teeth to 34/55, 36/55, or 35/54. 35/56 is not a hunting ratio because both numbers can be divided by 7. The same principal holds true for the ratio of the number of teeth in a meshlike action gear cutter to the number of teeth in the piece being machined.

*ANSI/AGMA 2001-D04

Figure 7

Allowable Transmitted Horsepower

	Bending	Pitting
14.5° Pressure Angle (Baseline)	468	450
25.0° Pressure Angle	733 (+57%)	681 (+51%)
100% Addendum (Baseline)	468	450
150% Addendum	608 (+30%)	474 (+5%)
Grade 1 Steel (Baseline)	468	450
Grade 3 Steel	638 (+36%)	1050 (+133%)
25° P.A,/150% Add./Grade 1 Steel	873 (+87%)	717 (+59%)
25° P.A./150% Add./Grade 3 Steel	1190 (+154%)	1674 (+272%)

Gear Mounting

The gear rim is the ring of material that lies under and serves to hold and support the gear teeth. The gear rim must be of sufficient radial thickness to prevent fatigue cracks from propagating through the rim rather than through the gear teeth. The American Gear Manufacturing Association provides a method for considering the effects of rim thickness on the load carrying capacity of gear teeth.* The analysis downgrades bending strength power ratings for gears with insufficient rim thickness. If the rim thickness is less than 1.2 times whole tooth depth, the allowable bending horsepower is reduced by a factor K_B. The equation for K_B is as follows:

$$K_B = 1.6 \ln (2.242/m_B)$$

K_B is the factor to be applied to the allowable bending strength equation. m_B is the ratio of the rim thickness to the whole tooth depth. In figure 8, the whole depth of the 3 diametral pitch teeth is .75 inch. Multiplying 1.2 times .75 inch yields .90 inch which is the minimum thickness of the underlying rim. If the rim thickness were .80 inch, using the above equation K_B is calculated as follows:

$$K_B = 1.6 \ln [2.242/(.80/.75)] = 1.189.$$

The allowable bending strength would then be downgraded by dividing by 1.189.

The following equation from The American Society of Mechanical Engineers** is used to determine the minimum shaft diameter needed to support the load that is imposed by a spur gearset delivering power. The equation will be used to calculate two of the design options from the previous sample problem.

$$D = \{16 / \pi\, p_t\, [(K_m M)^2 + (K_t T)^2]^{1/2}\}^{1/3}$$

D is the diameter of the pinion shaft in inches. π is a constant equal to 3.142. p_t is the allowable shear stress of the material. K_m and K_t are shock and fatigue rating factors. M is the maximum bending moment on the shaft due to gear separating and tangential forces in inch-lbs. T is the transmitted torque in

*ANSI/AGMA 2001-D04, **Article courtesy of Mechanical Engineering magazine Vol.49/No.5, May, 1927 474-476; copyright Mechanical Engineering magazine (the American Society of Mechanical Engineers).

inch-lbs. Shaft calculations for two of the design options listed on figure 7 are shown on page 38 as Appendix II.

From Appendix II it can be seen that the required minimum shaft diameter is 3.025 inches for the 25° design option and 3.643 inches for the multiple feature, grade 3 steel, option. The maximum shaft diameter allowed based on the rim thickness equation previously discussed is 3.871 inches also shown on Appendix II.

Figure 8

Gear Rim Thickness

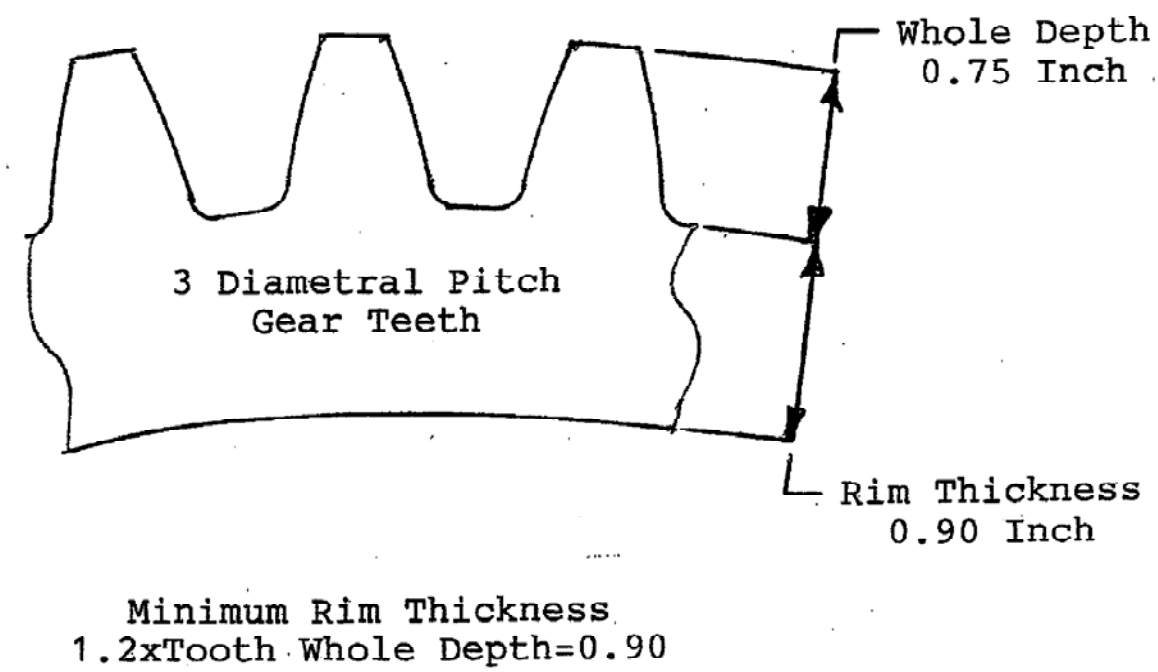

Application

Figure 9 has a gearbox with two spur gears in mesh. The upper gear is integral with the shaft while the lower gear is splined to its shaft. When the gear is not much larger than the shaft it is a good practice to design them as one piece which results in a more economical component with superior gear rim strength. Spur gears impose radial loads on shafts therefore both shafts are mounted on cylindrical roller bearings which support predominately radial loads. Both right bearings are shown supported by two different means. The support system above the centerline illustrates separately machined housing bearing bores while the support system below the centerline allows the bearing bores to be machined in one setting resulting in superior gear and bearing alignment. Also the lower mounting arrangement on the upper shaft allows the pinion to be removed by removing the bearing cover instead of having to separate the main housing.

Figure 10 has a view of a multispeed transmission gearshaft supported by two ball bearings. Three spur gears are designed as one piece and are made to slide on the shaft spline to mesh separately with three spur gears positioned above to deliver three different speed ratios. The right ball bearing is fixed axially and the left bearing is free to float in the housing to ensure good gear alignment and to accommodate machining tolerances and shaft thermal expansion.

Figure 11 has a sectional view of the center section of an automotive drive axle. The main drive spiral bevel pinion and ring gearset impose both radial and thrust loads and are therefore supported by tapered roller bearings which are designed to resist both radial and thrust loads. The center section differential which is composed of two sets of bevel gears allows individually powered rotation of the left and right axle shafts during vehicle cornering.

Figure 12 has an internal view of a 90° gearbox. It has spiral bevel gears mounted

inside a rugged cast iron housing. There is one input and two output shafts. The input shaft is overhung mounted from two tapered roller bearings while the output shaft is straddle mounted between two tapered roller bearings. It is a pre-lubricated self-contained unit which operates virtually maintenance free.

Figure 9

Spur Gears with Optional Mountings

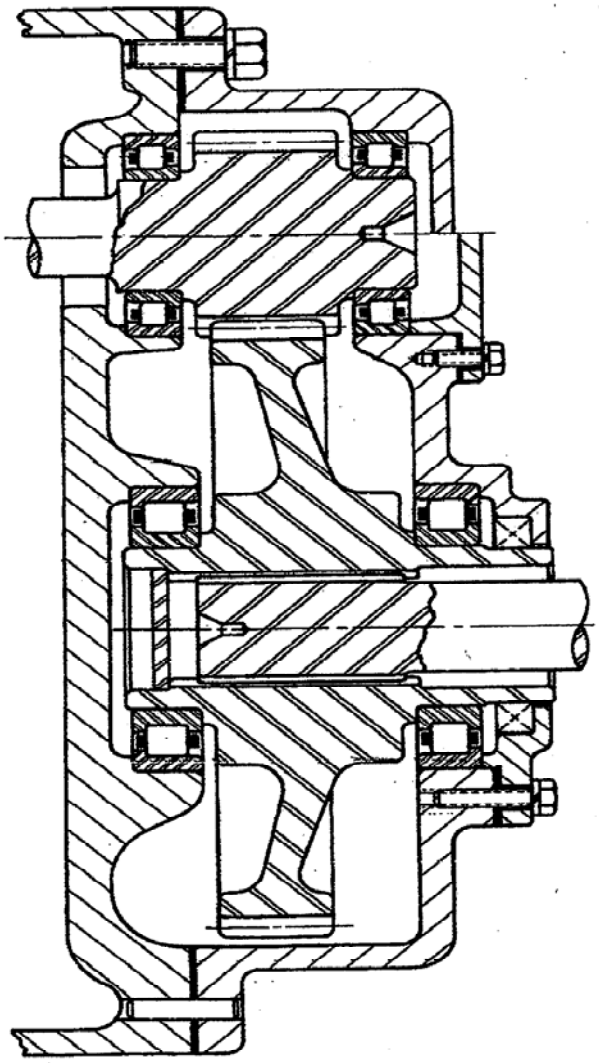

Figure 10

Multi-Speed Transmission

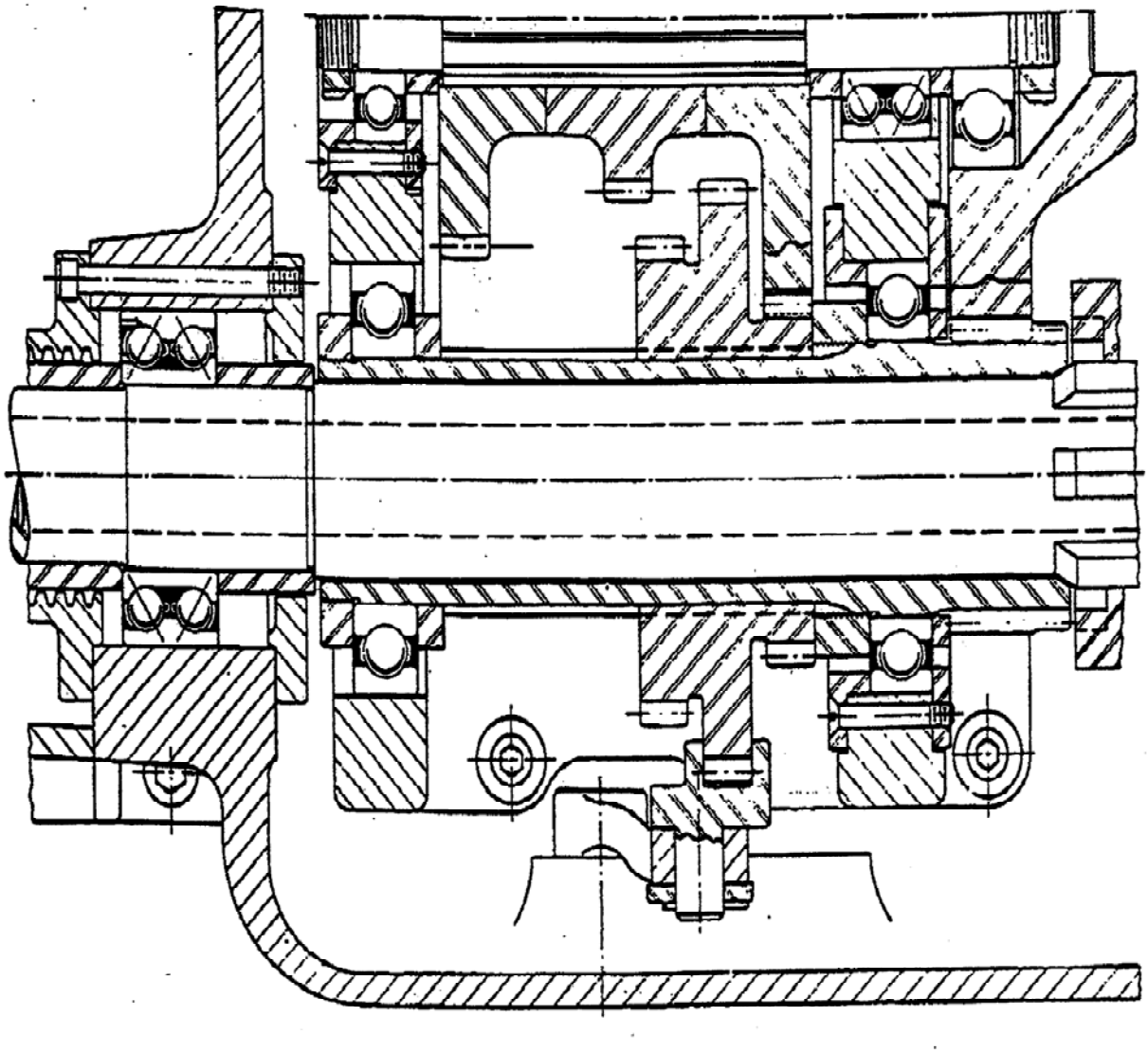

Figure 11

Automotive Drive Axle Center Section

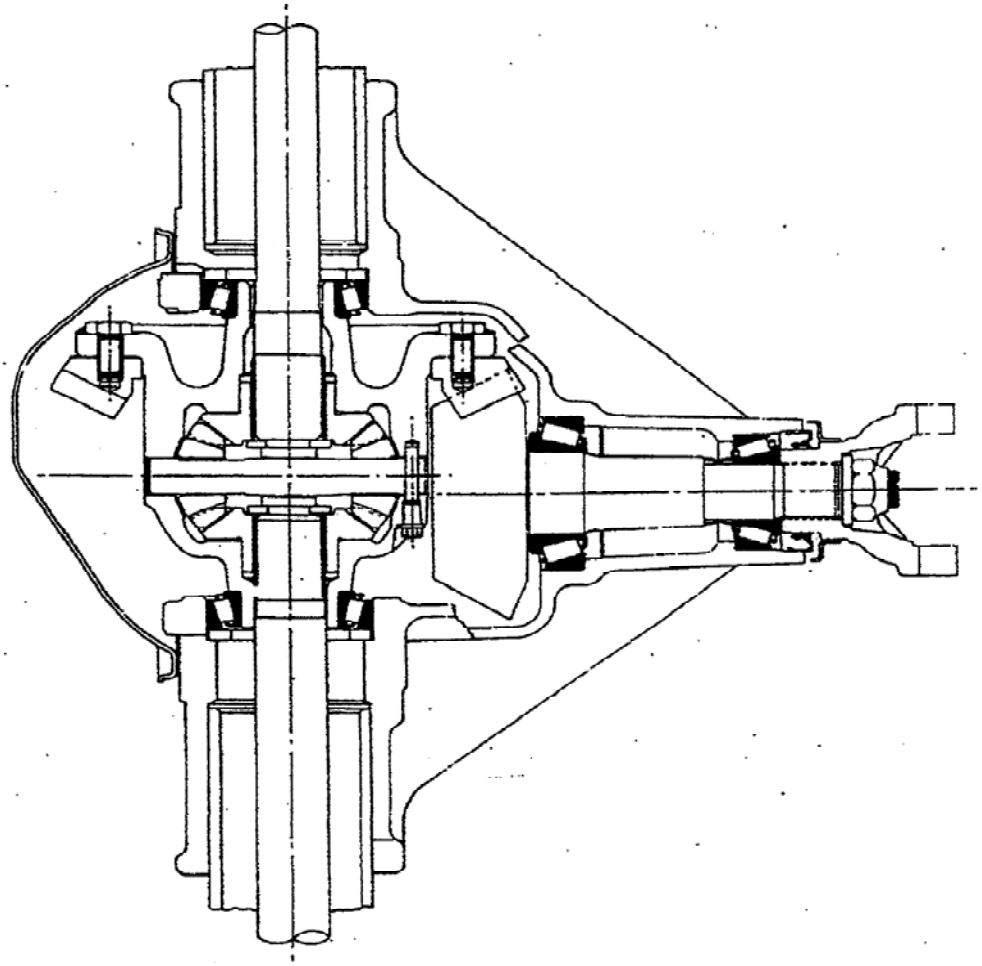

Bevel Pinion and Ring Gear
and
Bevel Gear Differential Unit

Figure 12

Spiral Bevel Gear Box

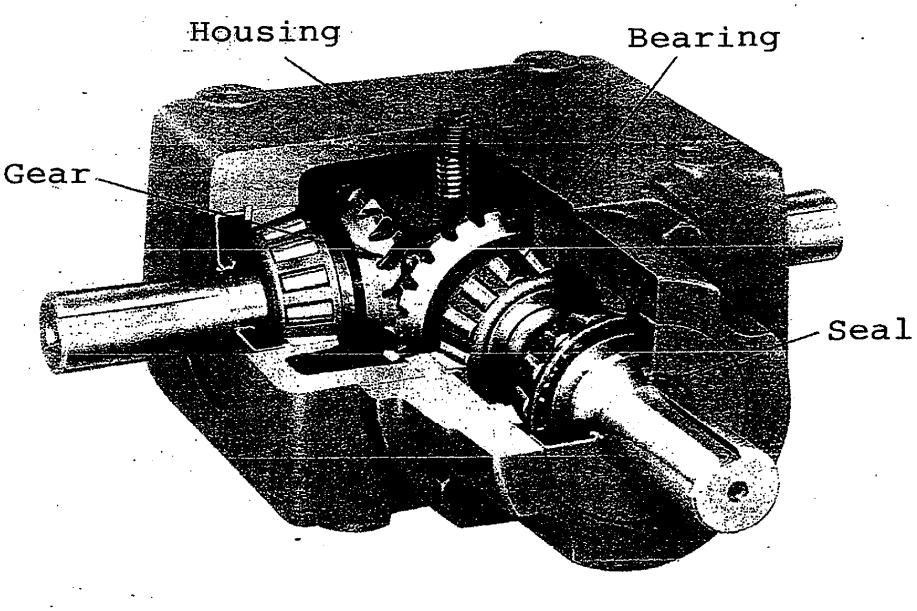

Image Courtesy of Emerson Power Transmission

Appendix I

Bending and Pitting Calculations

14.5^O P. Angle Bending) $P_{at} = (\pi n_p dFJs_{at}) / (396{,}000P_d)$

P_{at} = (3.142x1000x5x5x.30x55,000) / (396,000x7) = 468 hp (Baseline)

14.5^O Prs. Angle Pitting) $P_{ac} = (\pi n_p FI / 396{,}000) \times (ds_{ac} / C_P)^2$

P_{ac}= (3.142x1000x5x.074 / 396,000) x $(5 \times 180{,}000/2300)^2$ = 450 hp (Baseline)

25.0^O P. Angle Bending) P_{at} = 468 x (.47/.30) = 733 hp (+57%)

25.0^O Prs. Angle Pitting) P_{ac} = 450 x (.112/.074) = 681 hp (+51%)

100% Addendum Bend) P_{at} = 468hp (Baseline)

100% Addendum Pttng) P_{ac}= 450 hp (Baseline)

150% Addendum Bend) P_{at}= 468 x (.39/.30) = 608 hp (+30%)

150% Addendum Pttng) P_{ac}= 450 x (.078/.074) = 474 hp (+5%)

Grade 1 Steel Bending) P_{at}= 468 hp (Baseline)

Grade 1 Steel Pitting---) P_{ac}= 450 hp (Baseline)

Grade 3 Steel Bending) P_{at} = 468 x (75,000/55,000) = 638 hp (+36%)

Grade 3 Steel Pitting---) P_{ac} =450 x $(275{,}000/180{,}000)^2$ = 1050 hp (+133%)

25°PA/150%G1St/Bnd) P_{at} = 468 x (.56/.30) = 873 hp (+87%)

25°PA/150%G1St/Pitt-) P_{ac}= 450 x (.118/.074) = 717 hp (+59%)

25°PA/150%G3St/Bnd) P_{at} = 874 x (75,000/55,000) = 1190 hp (+154%)

25°PA/150%G3St/Pitt-) P_{ac}= 717 x $(275{,}000/180{,}000)^2$ = 1674 hp (+272%)

Appendix II

Pinion Shaft Diameter Calculation

Torque (T) = 681 hp x 63,025 / 1000 rpm = 42,920 in-lbs
681 hp from 25° pressure angle gearset design option

Pinion Tangential Force = 42920 in-lbs / 2.500 in = 17,168 lbs
2.500 in = pinion pitch radius [(35/7)/2]

Pinion Separating Force = 17,168 x tan 25° = 8006 lbs
25° = pinion teeth pressure angle

Total Force = $(17{,}168^2 + 8006^2)^{1/2}$ = 18,943 lbs

Moment Load (M) = 18,943 lbs / 5 x 1.375 in = 5209 in-lbs
Moment load calculated using beam formula.

Shaft Diameter (D) = $\{16 / \pi\, p_t\, [\, (K_m M)^2 + (K_t T)^2 \,]^{1/2}\}^{1/3}$
p_t = shaft shear stress in psi
K_m = bending moment factor
K_t = torsional moment factor

D = $\{16/3.142 \times 8000[(1.5 \times 5209)^2 + (1.0 \times 42{,}940)^2\,]^{1/2}\}^{1/3}$=<u>3.025</u> in
8000 psi shear stress for commercial grade steel

Max D = { 2.500 - [1.250 / 7] - [1.2 x (2.250 / 7)] } x 2 = <u>3.871</u> in
2.500 = pinion pitch radius in inches
1.250/7 = dedendum in inches
1.2x(2.250/7) = minimum rim thickness in inches
2.250/7= tooth whole height in inches
Above maximum allowable D based on minimum rim thickness

Torque (T) = 1190 hp x 63,025 / 1000 rpm = 75,000 in-lbs
1190 hp from 25° P.A./150 Add./Grade 3 Steel/Design Option

Pinion Tangential Force = 75,000 in-lbs / 2.500 in = 30,000 lbs

Pinion Separating Force = 30,000 lbs x tan 25° = 13,989 lbs

Total Force = $(30{,}000^2 + 13{,}989^2)^{1/2}$ = 33,101 lbs

Moment Load = 33,101 lbs / 5 x 1.375 in = 9103 in-lbs

$D=\{16/(3.142x8000)[(1.5x9103)^2+(1.0x75{,}000)^2]^{1/2}\}^{1/3}=\underline{3.643}$ in

