A SunCam online continuing education course

Fundamentals of Helical Anchors/Piles Part I

By

Thomas B. Watson, III, P. E.

Table of Contents

Fundamentals of Helical Anchors/Piles

A SunCam online continuing education course

The terms Helical Anchors, Helical Piles, Helical Piers, Helical Screw Piles, Screw Anchors and Screw Piles are often used interchangeably throughout the industry.

I. History of Helical Anchors/Piles

The original patent of the "Screw Pile" was granted in 1833 to an English inventor by the name of Alexander Mitchell. The "Screw Pile" was first used to support lighthouses in the tidal basins of England. This concept was also used for lighthouses along the Atlantic Coast.

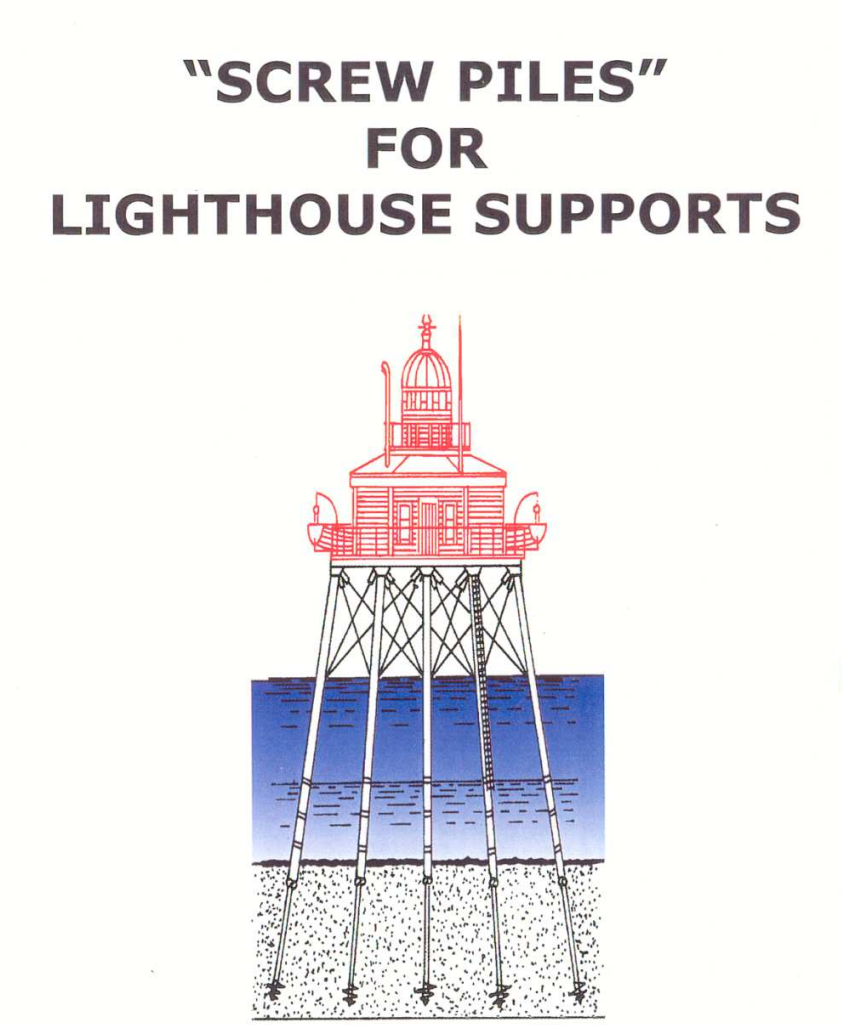

Fundamentals of Helical Anchors/Piles

A SunCam online continuing education course

In the 1920's, the electric power industry began using manually installed light load capacity Helical Anchors for guy anchorage of utility poles. By the 1950's the electric power industry was using power driven Helical Anchors with tension capacities of 36,000 pounds for guy anchorages for towers and utility poles. The 1960's saw the use of Helical Anchors extended by the power industry for the use of guy anchorages in excess of 100,000 pound capacities for transmission towers. The use of Helical Anchors for compression loads also began during this time period. The past 40 years has seen an ever growing list of applications for Helical Anchors, including underpinning systems for structures subjected to settlement, foundation retrofits, pipeline supports, buoyancy control for underground pipelines and tanks, marine moorings, equipment mounts, tiebacks for earth retaining walls, street light foundations, guyed tower mast and anchorage foundations, and many other applications for both new and existing structures.

Helical Anchor Foundation for Guyed Tower Mast

II. What are Helical Anchors/Piles?

A Helical Pile is simply a steel shaft with one or more helices welded to the steel shaft.

A Helical Pile has three components:

1. Shaft:

There are two types of shafts; round cornered square (RCS) shafts which typically range from $1\frac{1}{4}$" to $2\frac{1}{4}$" across, and $2\frac{7}{8}$"Ø to $8\frac{5}{8}$"Ø steel pipe.

The shaft has four primary functions:

A. To provide sufficient torque capacity during the installation of the pile
B. To provide load transfer from the helices to the shaft during and after installation
C. To provide load transfer from the structure after installation
D. To provide the connection to the structure

2. Helices:

Typically, helices are either **⅜”** or **½”** thick and range from 6” to 16” diameter. Helical piles may have as few as one helical and as many as six helices. Helical piles always have the smallest diameter helical at the leading end of the shaft and are followed by larger or equal diameter helices. The industry standard for the pitch of the helical for any thickness or diameter is 3 inches per 360 degrees rotation. Helices are spaced on the shaft at a minimum distance of three times the diameter of the lower helix, if the spacing is greater than a distance of three times the diameter of the lower helix, the additional distance must be in 3” increments. The soil disturbance is minimized when each helix tracks through the same continuous helical groove cut into the soil. The helical plates must be formed to a true helix with uniform pitch by matching metal dies.

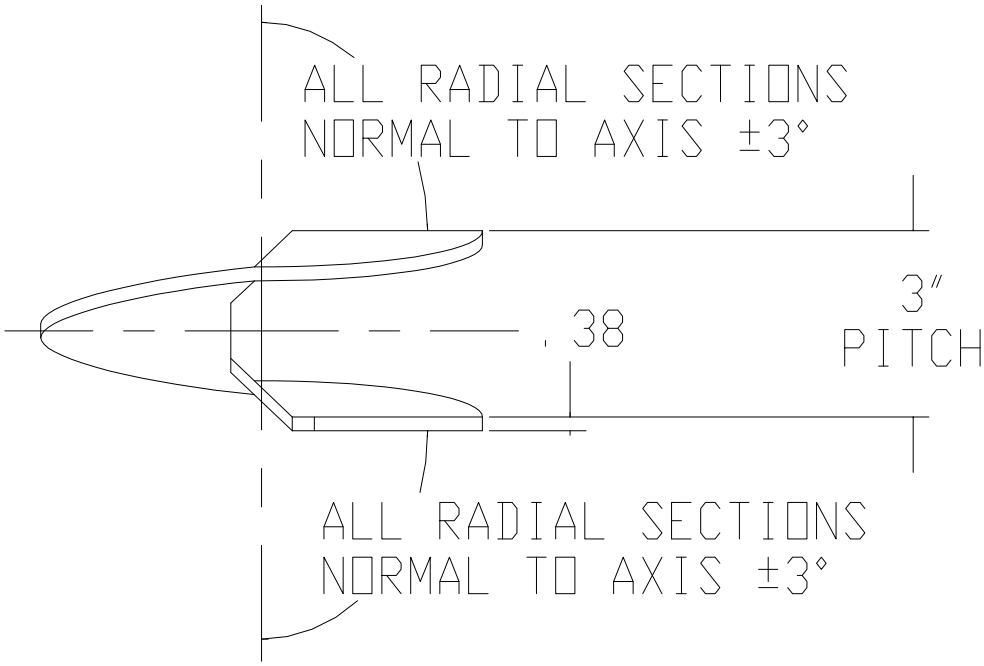

The Helices have four primary functions:

A. To provide a pulling force on the pile by the soil to bring the pile to the depth at which the required torque is achieved during the installation of the pile
B. To provide the required torque and bearing capacity during and after installation
C. To transfer load into the soil by bearing pressure after installation
D. To provide the required strength through the weld at the helix/shaft connection during and after installation

3. Connection of Pile to Structure:

There are a variety of methods for making the connection of the pile to the structure. Typically, when the piles are used to support a concrete pile cap, a steel plate with an attachment bolt is used to spread the load and prevent punching shear failure. The figure below shows this type of plate.

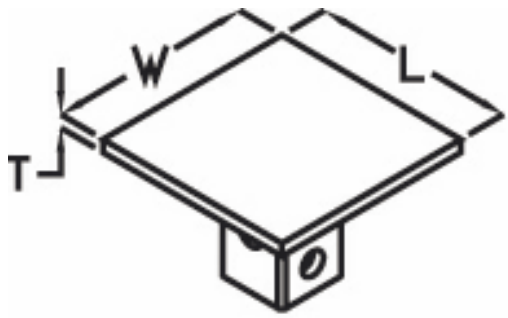

If the pile is required to be connected to a structure where no part of the foundation is concrete or the structure is existing, then a wide range of more complex brackets or assemblies would be required. The figures below show these types of brackets or assemblies.

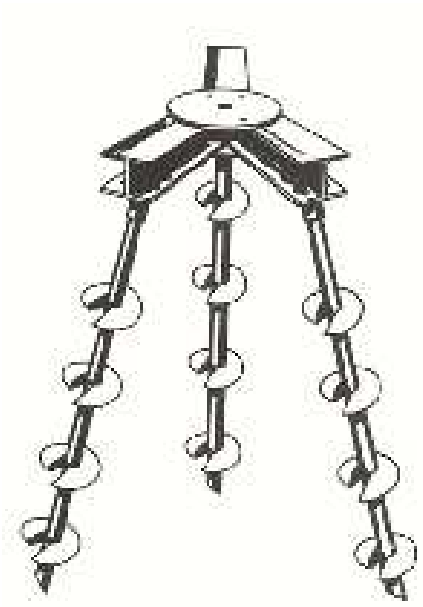

III. An Overview of Corrosion

Underground corrosion of steel in soil has been studied extensively since the early 20th century. Most research consists of burying samples of known composition and dimensions, then retrieving the samples after some time and analyzing them for indications of corrosion. Numerous attempts have been made to predict the extent of corrosion by correlating various soil parameters with observed rates of corrosion with limited success. Empirical observations have yielded generally accepted formulas for calculating the expected rate of corrosion, and consequently, the amount of lost of material.

One of the most widely referenced works is Underground Corrosion, National Bureau of Standards No. 579, by Melvin Romanoff, first published in 1957 and later re-released in 1989. In 1972 the U.S. Department of Commerce published the NBS Papers on Underground Corrosion of Steel Piling, 1962-1971, wherein Romanoff reported the results of multi-year studies of buried steel pilings in a variety of soils. Romanoff noted that pilings in undisturbed soils encountered very little to no corrosion.

The corrosion behavior of steel in soil can be divided into two categories: corrosion in disturbed soil, and corrosion in undisturbed soil. Disturbed soil is soil in which soil upheaval has taken place, such as digging or backfilling. A natural consequence of soil disturbance is the introduction of oxygen. Soil resistivity, pH, chloride content, sulfate content, sulfide ion content, soil moisture, and oxygen content within the soil influence the corrosion rate of steel in disturbed soil. The measurement of these parameters provides an indication of the corrosiveness of a soil. Having so many factors involved and considering the complex nature of their interaction, the corrosion rates of steel helical anchors cannot be conclusively predicted. However, an approximation of the potential corrosion can be estimated by comparing site conditions and soil corrosion parameters at a proposed site with historical information at similar sites. Corrosion of steel in disturbed soils varies widely and correlates most consistently with the conductivity of the soil as a result of lowered resistance to stray electric currents.

The rate of corrosion of steel in undisturbed soil has been observed to be negligible. Romanoff reported that “soil environments which can be predicted to be severely corrosive to iron and steel under disturbed conditions in excavated trenches were not corrosive to steel pilings driven in undisturbed soils. The difference in corrosion was attributed to the differences in oxygen concentrations. It was indicated that undisturbed soils are so deficient in oxygen at levels a few feet below the ground line, or in and below the water table zone, that steel pilings are not appreciably affected by corrosion, regardless of the soil types or the soil properties.”

Fundamentals of Helical Anchors/Piles

A SunCam online continuing education course

The findings of Romanoff were corroborated in 1979 in the study "Corrosion and Corrosivity of Steel in Norwegian Marine Sediments" by K.P. Fischer and Bente Bue [Underground Corrosion, ASTM Special Technical Publication 741]. For steel piles with 10 to 70 years of service, the maximum corrosion rate was only 0.030 mm per year in highly corrosive soil where the resistivity = 1 ohm/meter.

The majority of the length of a helical anchor is in undisturbed soil. The portion of the helical anchor in the region of disturbed soil near the top of the anchor shafts has an increased availability of oxygen and the potential for corrosion. Therefore, it may become necessary to provide a means of protection for the steel in this region from corrosion. The most common types of corrosion protective coatings for helical anchors are hot-dipped galvanization or epoxy. Another means of mitigating corrosion is cathodic protection. For this type of system, a professional corrosion engineer should be consulted.

By coating the steel that is in contact with disturbed soil, corrosion is effectively deterred. If the steel exposed to disturbed soils is properly protected, service life of helical anchors can be expected to be longer than 75 years, and may exceed 125 years in some cases.

Resistance Classification	Soil Resistivity	Soil Type	Resistivity Range (ohm/cm)	Corrosion Potential
Low	0 – 2,000	Clay	500 – 2,000	Severe
		Silt	1,000 – 2,000	
Medium	2,000 – 10,000	Loam	3,000 – 10,000	Moderate
		Fine Silts & Organic	2,000 – 10,000	
High	10,000 – 30,000	Sand	10,000 – 30,000	Mild
Very High	Above 30,000	Sand	30,000 – 100,000	Unlikely
		Gravel	40,000 – 200,000	

IV. Spacing Guidelines for Helical Anchors/Piles

There are a number of generally accept guidelines or standard practices when designing a foundation system using helical piles.

The minimum center-to-center spacing between adjacent helical piles shall be 3 times the diameter of the largest helix but not less than 3 feet.

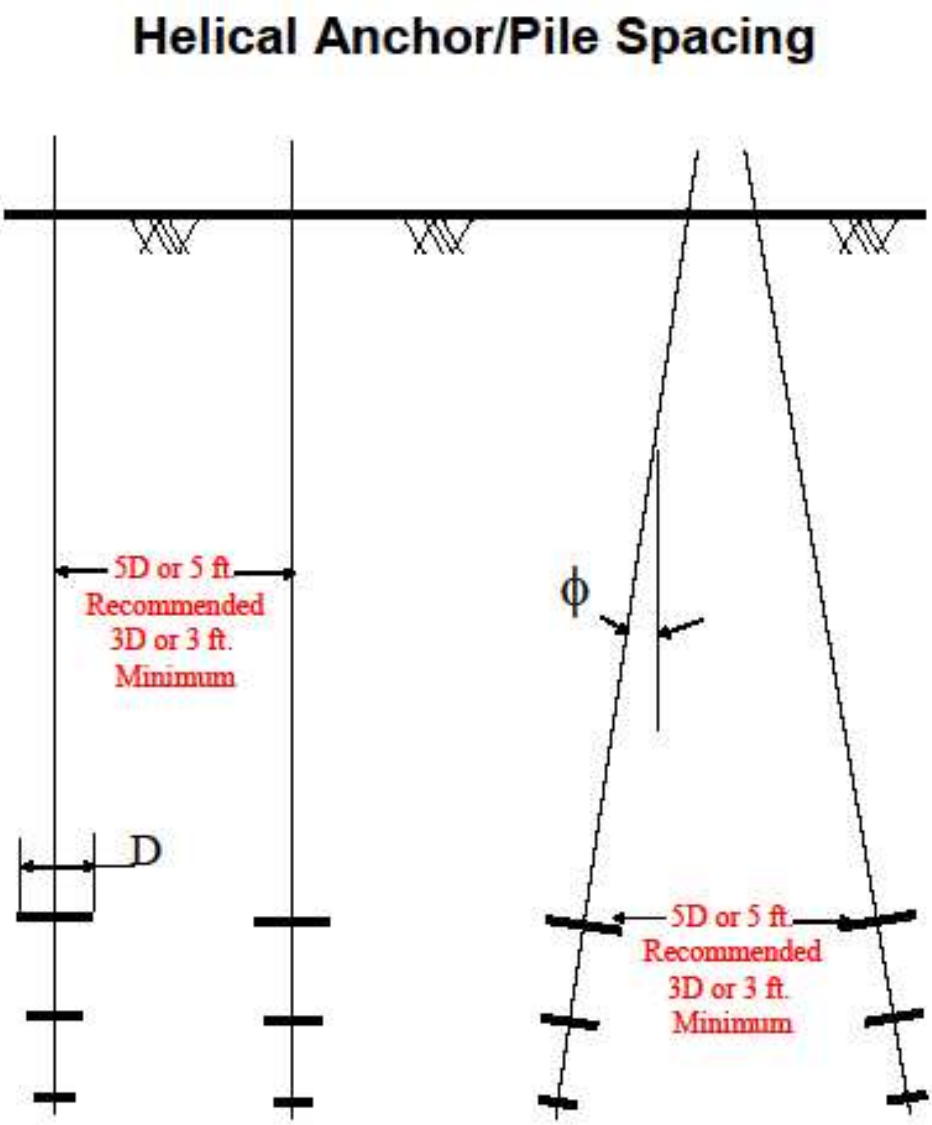

The minimum vertical depth to the uppermost helix shall be 5 times the diameter of the uppermost helix.

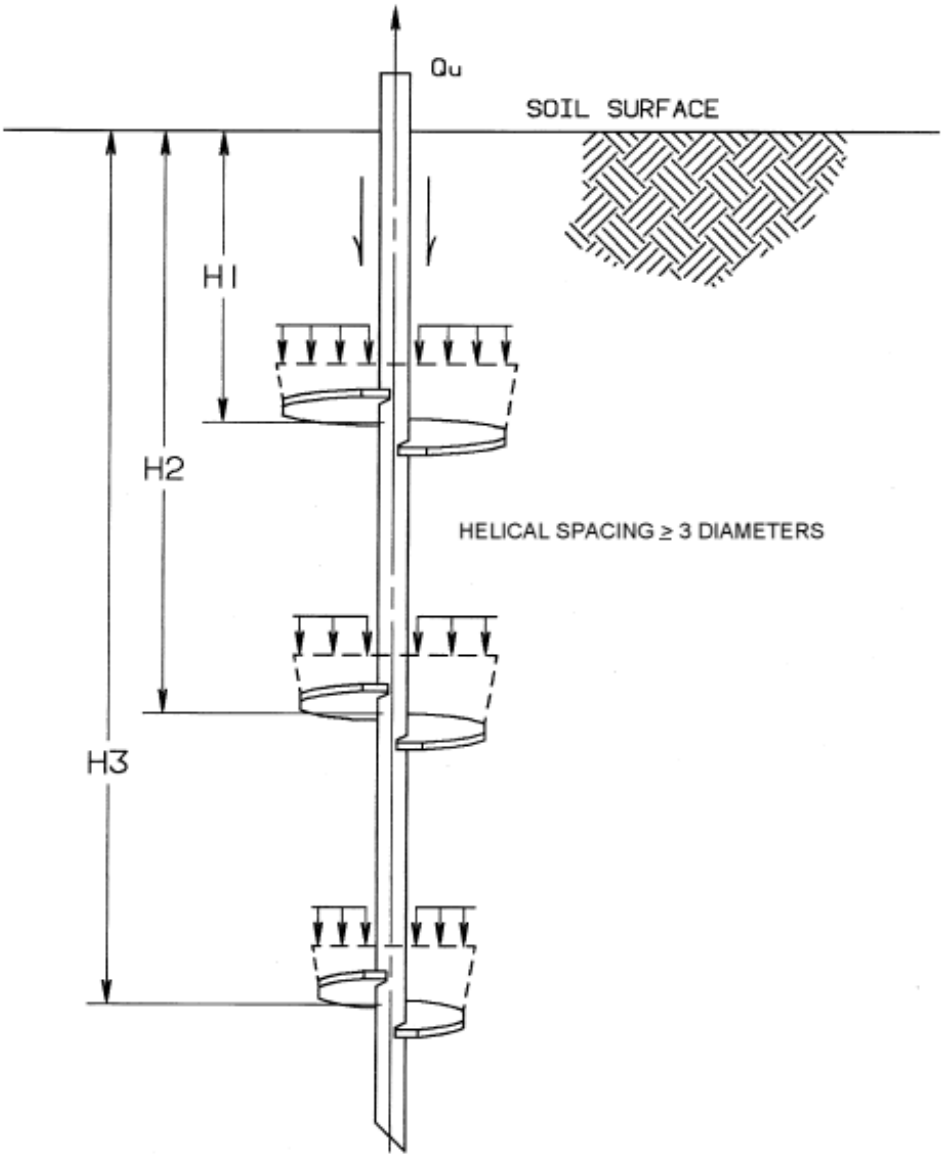

H1 = Depth to Diameter Ratio $\geq$ 5D

By placing the uppermost helix to a minimum depth of 5D assures that the helical pile is in the deep foundation category for a pile in tension. For deep foundation mode of soil failure in tension, the soil fails progressively, while for a tension pile with a depth to diameter ratio < 5D, which is in the shallow foundation category, the pile fails abruptly with load resistance dropping to near zero.

V. Correlation between Torque and Load Capacity for Helical Anchors/Piles

The two primary factors which contribute to the torque resistance during the installation of a helical pile are friction and penetration resistance. The resistance portion due to friction is significantly larger than that due to penetration resistance.

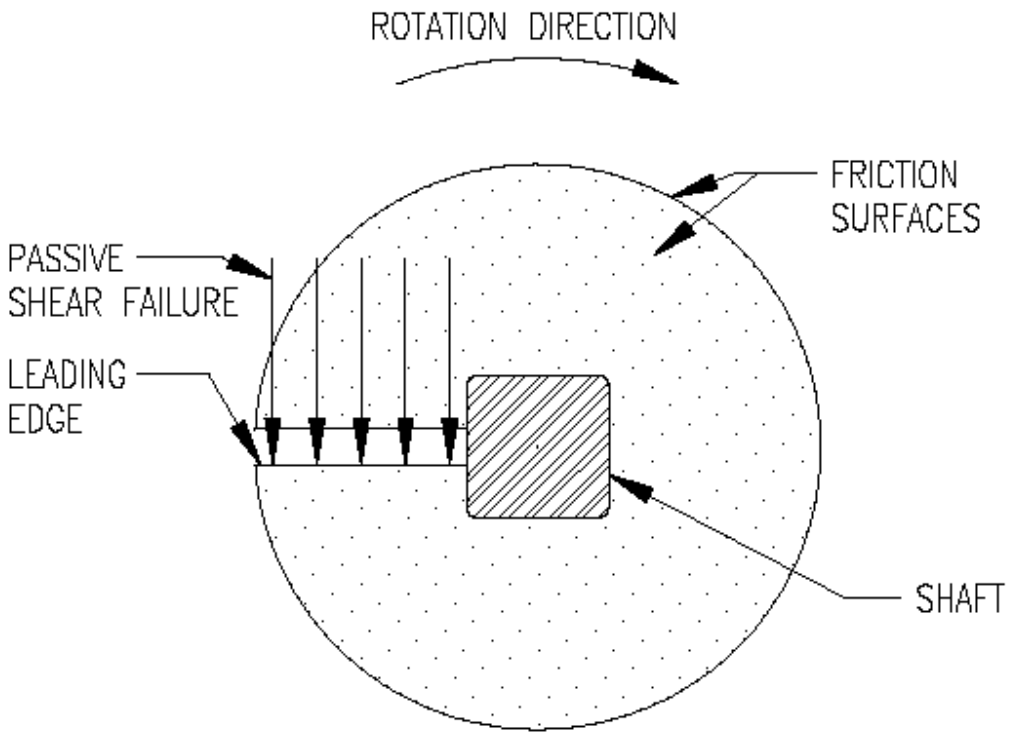

FRICTION ON HELIX

There are two basic components which contribute to friction: friction on the helix plate and friction on the shaft. The friction resistance on the helix plate increases with an increase in helix diameter. The surface area of the helix in contact with the soil increases with the square of the helix diameter.

The amount of friction along the shaft depends on the type of shaft as well as the shaft dimensions. A square shaft will incur less friction with the soil because only the corner surfaces of the square shaft will be in contact with the soil.

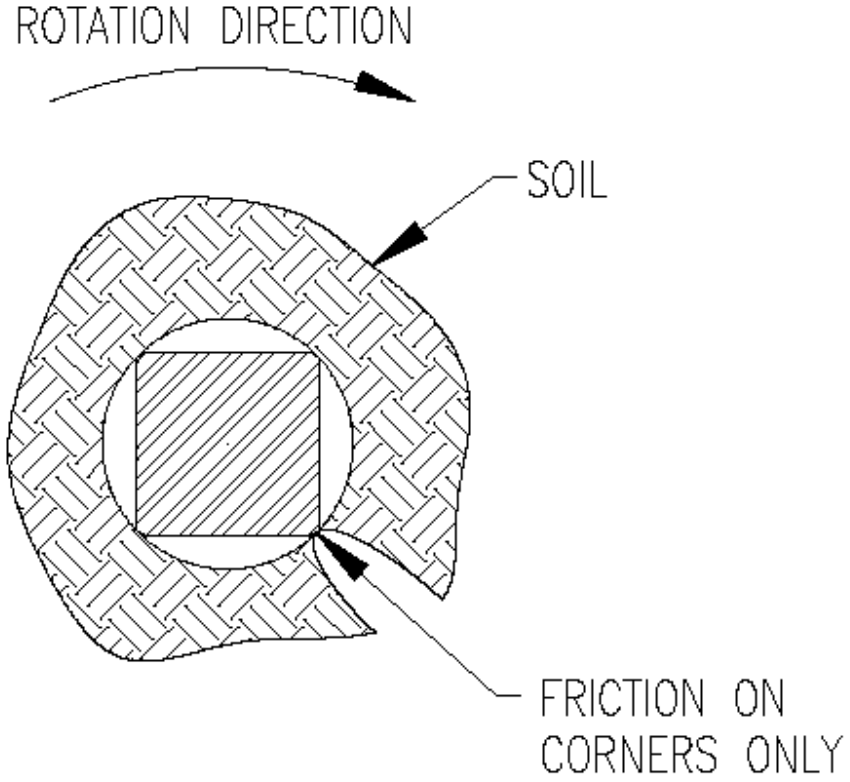

FRICTION ON SQUARE SHAFT

A round shaft will incur friction with the soil around its complete perimeter and similar to a helical plate, the larger the shaft diameter the larger the amount of friction. A round shaft is more efficient than a square shaft for the purpose of transmitting torque but does have the disadvantage of incurring a significantly larger friction resistance.

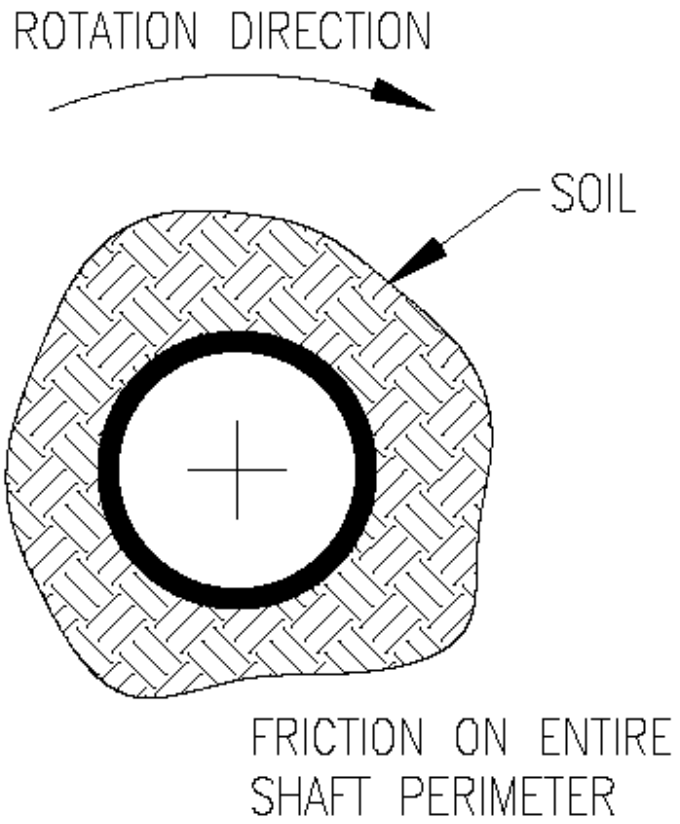

FRICTION ON ROUND SHAFT

Fundamentals of Helical Anchors/Piles

A SunCam online continuing education course

There are two basic components which contribute to penetration resistance: shearing resistance on the leading edge of the helical plate and penetration resistance on the pilot point of the shaft. The shearing resistance on the helix increases as the diameter of the helix increases.

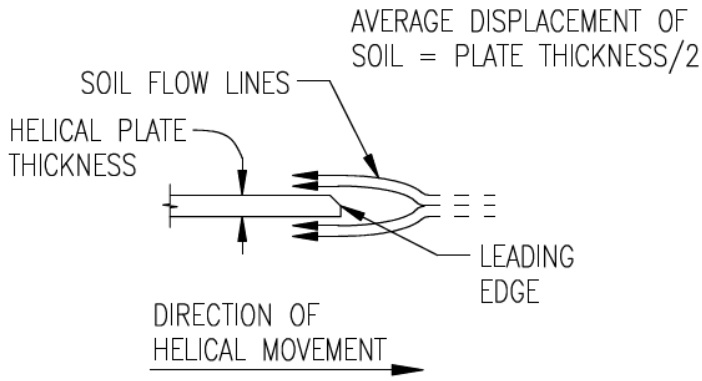

PENETRATION RESISTANCE ON HELIX DUE TO SHEAR

The penetration resistance on the pilot point of the shaft increases as the diameter of the shaft increases.

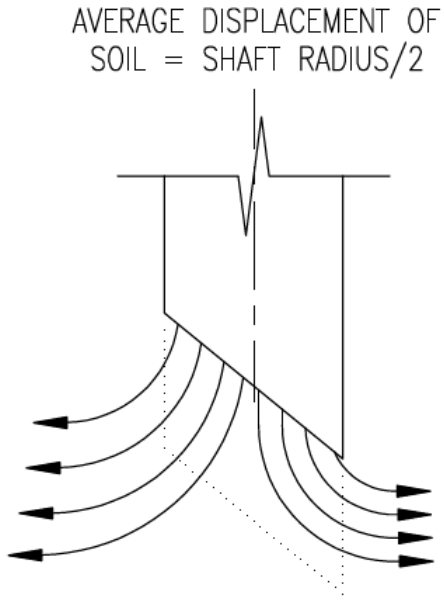

PENETRATION RESISTANCE ON PILOT POINT OF SHAFT

There are two alterations to the helix which can be done to reduce penetration resistance: cut the leading edge of the helix to a sharper edge eliminating the blunt portion of the leading edge and scallop or seashell the leading edge.

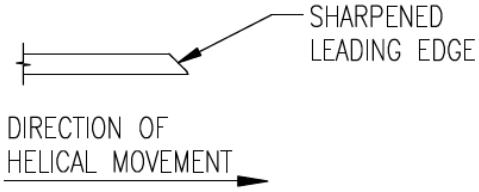

SHARPENED LEADING EDGE TO REDUCE PENETRATION RESISTANCE ON HELIX DUE TO SHEAR

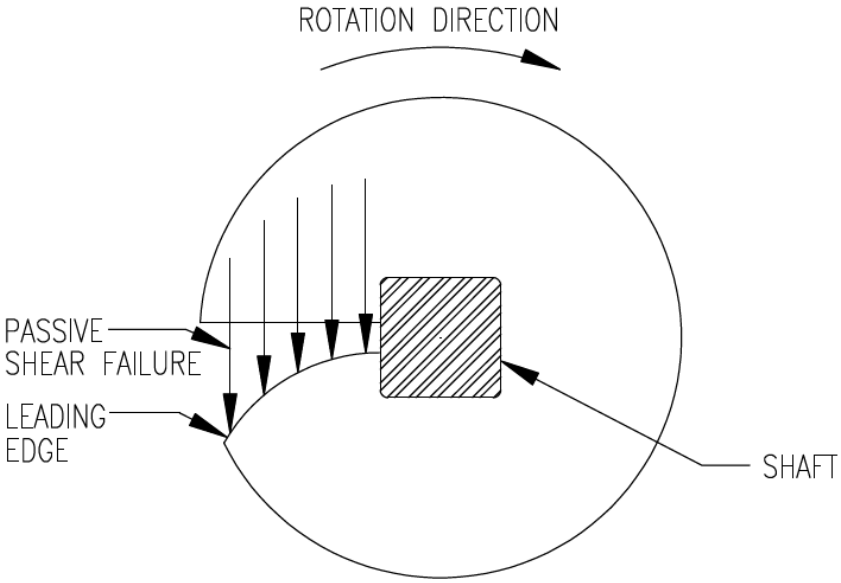

SCALLOPED LEADING EDGE TO REDUCE PENETRATION RESISTANCE ON HELIX

An additional benefit of scalloping the leading edge is that if cobbles or small obstructions are present in the soil, the rounded leading edge makes it easier for the helix to pass the obstruction.

Fundamentals of Helical Anchors/Piles

A SunCam online continuing education course

The installation torque vs. load capacity is an empirical relationship which has been used for many years. A landmark paper on this topic was presented at the 12th International Conference on Soil Mechanics and Foundation Engineering by Hoyt and Clemence (1989). Hoyt and Clemence proposed the following formula that correlates a helical pile's ultimate capacity to the installation torque:

$$Q_{ult} = K_t \times T$$

Where: Q_{ult} = Ultimate capacity (Pounds)
K_t = Empirical Torque Factor (Feet $^{-1}$)
T = Average Installation Torque (Foot-Pounds)

The basic principle is that the denser or harder the soil is, the greater the amount of torque is required; or the higher the installation torque, the higher the axial capacity of the helical pile.

The K_t value is not a constant but has a different value depending on whether the shaft is square or round. If the shaft is round the K_t value is also dependant on the shaft diameter. From the research done by Hoyt and Clemence, the recommended K_t value for a square shaft is 10 feet $^{-1}$. For round shafts equal to 3½" in diameter the K_t value is 7 feet $^{-1}$ and for round shafts having a diameter of $8^5/_8$" in diameter their K_t value equals 4.5 feet $^{-1}$. Some of the factors other than the shaft size and shape which can have an affect on the value K_t are the soil conditions, helix thickness, presents of water table and whether the application of the helical pile is in tension or compression. The values for K_t vary slightly amongst different helical pile manufactures; the chart below shows some typical values for K_t.

Shaft Size	K_t
Square Shaft	10
2⅞"Ø Pipe Shaft	8
3 ½" Ø Pipe Shaft	7
4 ½" Ø Pipe Shaft	6
8⅝" Ø Pipe Shaft	4.5

VI. Soil Mechanics

Soil mechanics is defined as the science of predicting and understanding how externally applied forces and pressures will cause soil to behave. Some soils are of organic origin. Most soil is the result of weathering rock, which over time is broken down by physical and chemical means into smaller particles. As rock weathers it becomes boulders, then cobbles, gravel, sand, silt and finally clay.

Soils can be divided into two basic types: Residual Soil and Transported Soil.
Residual soil is soil which has remained over the rock from which it was produced. This type of soil generally has superior properties for supporting foundation loads than does transported soils. Transported soils are soils which have been transported or deposited in areas away from the original rock from which they were produced. The manner of transporting these soils would have taken place by the movement of water (Alluvial), blown by the wind (Aeolian) or pushed by glaciers (Glacial).

Most soils are comprised of a variety of sediments or particles in addition to air, water and sometimes organic matter. Soils are typically non-homogeneous with particle sizes varying greatly within a given sample. The soil particle sizes and distribution of soil particle sizes influence soil properties and performance. The chart below shows the classification of particle sizes used by the ASTM Unified Soil Classification System.

Soil Particle Sizes			
Type	**Fraction**	**Sieve Size**	**Diameter**
Boulders	**-**	**12″ Plus**	**300 mm Plus**
Cobbles	**-**	**3″ – 12″**	**75 – 300 mm**
Gravels	**Coarse**	**0.75″ – 3″**	**19 – 75 mm**
	Fine	**No. 4 – 0.75″**	**4.76 – 19 mm**
Sand	**Coarse**	**No. 10 – No. 4**	**2 – 4.76 mm**
	Medium	**No. 40 – No. 10**	**0.42 – 2 mm**
	Fine	**No. 200 – No. 40**	**0.074 – 0.412 mm**
Fines(silts & clays)	**-**	**Passing No. 200**	**0.074 mm**

The two basic soil types that are defined by particle size are coarse-grained soils and fine-grained soils. Coarse-grained soils consist of particles that are too large to pass through a #200 sieve (0.074 mm). A #200 sieve has 200 openings per inch. Cobbles, gravels and sands are coarse-grained soils and are commonly referred to as non-cohesive soils. The particles in a non-cohesive soil typically do not stick together unless sufficient moisture is present, which is caused by the surface tension of the water molecules. Fine-grained soils consist of particles that are small enough to pass through a

#200 sieve. Silt particles typically range from 0.074 to 0.002 mm while clays are typically smaller than 0.002 mm. Silts and clays are fine-grained soils and are commonly referred to as cohesive soils. Molecular attraction causes the particles of cohesive soils to stick together. The chart below shows the classification of soils used by the ASTM Unified Soil Classification System.

Major divisions			**Group Symbol**	**Group name**
Coarse grained soils more than 50% retained on No. 200 (0.075 mm) sieve	gravel > 50% of coarse fraction retained on No. 4 (4.75 mm) sieve	clean gravel <5% smaller than #200 Sieve	**GW**	well graded gravel, fine to coarse gravel
			GP	poorly graded gravel
		gravel with >12% fines	**GM**	silty gravel
			GC	clayey gravel
	sand ≥ 50% of coarse fraction passes No.4 sieve	clean sand	**SW**	well graded sand, fine to coarse sand
			SP	poorly-graded sand
		sand with >12% fines	**SM**	silty sand
			SC	clayey sand
Fine grained soils more than 50% passes No.200 sieve	silt and clay liquid limit < 50	inorganic	**ML**	silt
			CL	clay
		organic	**OL**	organic silt, organic clay
	silt and clay liquid limit ≥ 50	inorganic	**MH**	silt of high plasticity, elastic silt
			CH	clay of high plasticity, fat clay
		organic	**OH**	organic clay, organic silt
Highly organic soils			**Pt**	peat

Grains size distribution of a soil is also conveniently presented by the use of a semi-logarithmic graph as shown in the figure below.

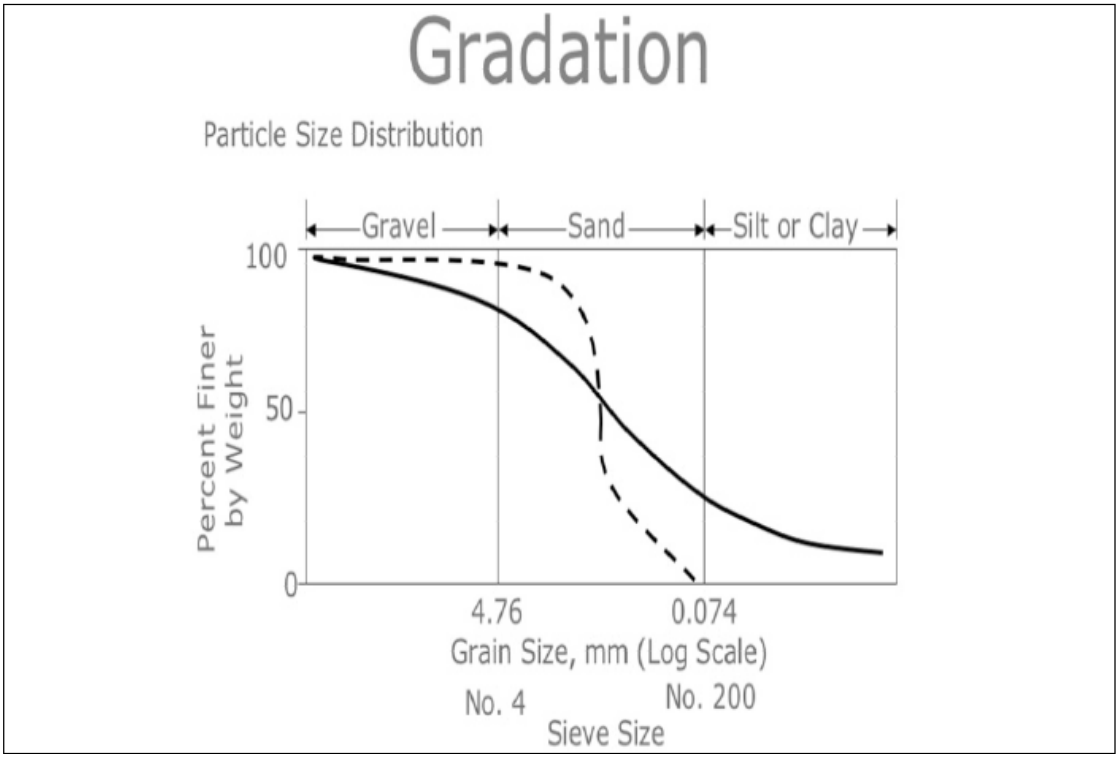

By the use of this type of visual representation of the soil's grain size distribution, it is clear that the solid line represents a well-graded soil, while the dashed line represents a poorly graded soil.

Shear strength is one of the most important engineering structural properties of soil. Shear strength refers to the soils ability to resist sliding along internal surfaces and is the property which influences bearing capacity. Shear strength results from three sources: the friction between the particles, particle interlocking, and the chemical bond between the particles. For non-cohesive soils, such as sands and gravels, the shear strength is expressed by the following equation:

$$S = \mathbf{s} \tan \phi$$

where: S = shear strength or shearing stress at failure

$\mathbf{s}$ = normal stress acting on the plane of failure

ϕ = angle of internal friction

There are several methods for determining ϕ, the angle of internal friction. A geotechnical engineering consultant typically performs one of the tests to determine the angle of internal friction following their sub-surface exploration. The Triaxial Shear test is the most accurate test to determine the angle of internal friction, however, there is a correlation between the "N" values (blows per foot) and ϕ if the Standard Penetration Test (SPT) ASTM D 1586 is used. The relationship between ϕ and standard penetration number for sands is shown in the chart below (from Peck 1974, *Foundation Engineering Handbook*).

SPT Penetration, N-Value (blows/ foot)	**Density of Sand**	**ϕ** (degrees)
<4	Very loose	<29
4 - 10	Loose	29 - 30
10 - 30	Medium	30 - 36
30 - 50	Dense	36 - 41
>50	Very dense	>41

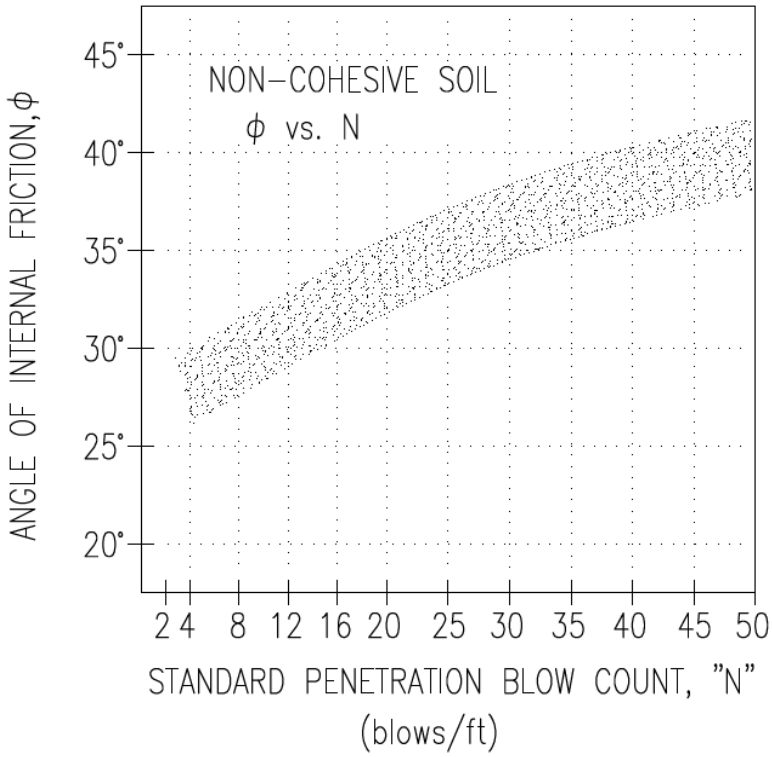

Approximate correlation between ϕ and N for non-cohesive soils

For cohesive soils such as clays and some silts, the shear strength is expressed by the following equation:

$$S = c + (\mathbf{s} - u) \tan \phi$$

where: S = shear strength or shearing stress at failure

c = cohesion

s = total stress acting on the plane of failure

ϕ = angle of internal friction

u = pore water pressure

There are several methods for determining c, the cohesion. A geotechnical engineering consultant typically performs one of the tests to determine the cohesion following their sub-surface exploration. The Unconfined Compression Test is the most widely used method, however, there is a correlation between the "N" values (blows per foot) and cohesion if the Standard Penetration Test (SPT) ASTM D 1586 is used. The empirical relationship between the standard penetration number "N" for cohesive soils and the unconfined compressive strength is shown in the chart below (from Foundation Analysis, Bowels).

SPT Penetration (blows/ foot)	**Estimated Consistency**	S_{uc} (kips/ft^2)
0 - 2	Very Soft	0 - 0.5
2 - 4	Soft	0.5 - 1.0
4 - 8	Medium	1.0 - 2.0
8 - 16	Stiff	2.0 - 4.0
16 - 32	Very Stiff	4.0 - 8.0
>32	Hard	>8

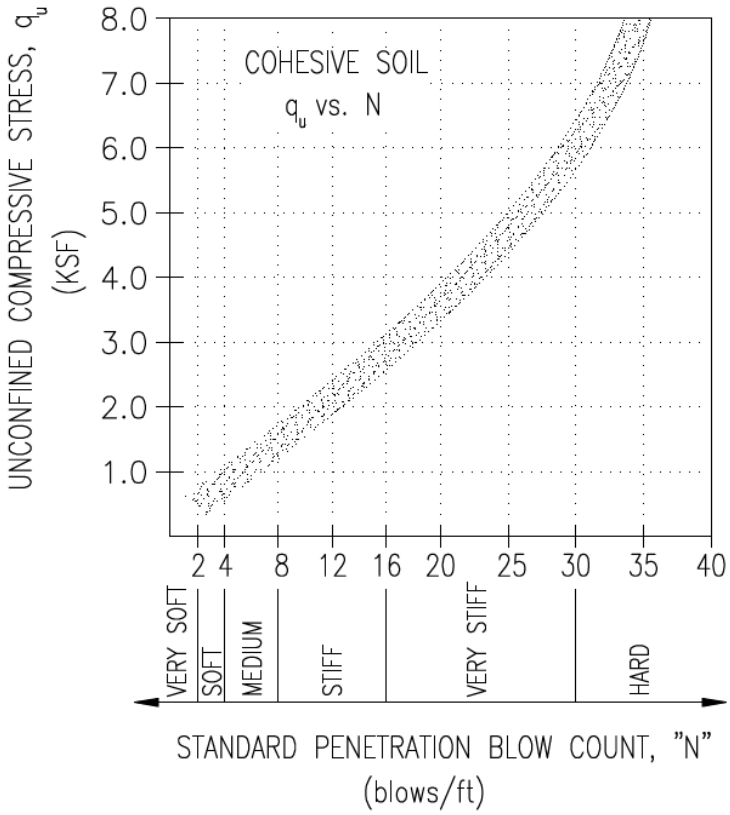

Approximate correlation between q_u and N for cohesive soils

Most soils are neither completely cohesive (friction angle = 0°) or completely non-cohesive (cohesion = 0). If cohesive and friction properties both exist, the soil is considered mixed or a c-ϕ soil. It is recommended that the engineer be familiar with this type of soil and that these types of mixed or c-ϕ soils be approached with caution.

Skin friction between a typical helical pile and the soil with a shaft diameter $\leq$ 3.5" OD is relatively small when compared to the total helix capacity and is normally neglected with little error. However, for helical piles with shaft diameters $\geq$ 4.5" OD, and particularly when the piles are deep, the friction can become significant. A convenient method of estimating this friction or adhesion is shown below for both cohesive and non-cohesive soils.

Cohesive Soils:

$Q_f = \mathbf{S}(C_a \times (\mathbf{p} \times D_p) \times dL)$

where: C_a = Adhesion value based on the soil's cohesion as shown in the table

D_p = Helical Pile Shaft Diameter

dL = Elemental Length of Pile subjected to adhesion or friction (Typically the soil near ground level is disturbed and will not significantly contribute to the friction; disregard the soil in the upper 5 foot section of the pile.)

Consistency of Soil	Cohesion, C (psf)	Adhesion, Ca (psf)
Very Soft	0 - 250	0 - 250
Soft	250 - 500	250 - 460
Med. Stiff	500 - 1000	460 - 700
Stiff	1000 - 2000	700 - 720
Very Stiff	2000 - 4000	720 - 750
From Department of the Navy Design Manual 7, *Soil Mechanics, Foundations and Earth Structures (1974)*		

Non-Cohesive Soils:

$Q_f = \mathbf{S}(q \times K \times TAN\ (fa') \times \mathbf{p} \times D_p \times dL)$

where: q = Effective vertical overburden stress acting on length "L". The Naval Design Manual referenced above limits the value of q to a depth of 20 $\times$ D_p. If greater values of q are applied it should be noted on the calculation sheets.

K = Coefficient of Lateral Earth Pressure – Lateral Effective Stress/Vertical Effective Stress Unless information is provided on the value of K, use the default value of K = 1.0

fa' = Friction Angle between the pile surface and soil.
(Not to be mistaken as the internal angle of friction of the soil.) A conservative value of 14 degrees assumes a silty sand, gravel or sand mixed with silt or clay.

<u>Example 1:</u> Given an 8 $^{5}/_{8}$" OD pile shaft is installed 18 feet into the loose sand and gravel having a unit weight of 90 lb/ft^3, determine the friction resistance between the shaft and the soil (consider that the water table never rises above 100 feet below the surface).

<u>Solution:</u> The limit of the value of q is
20 **x** D_p = 20 **x** 8.625**/**12 = 14.375 ft

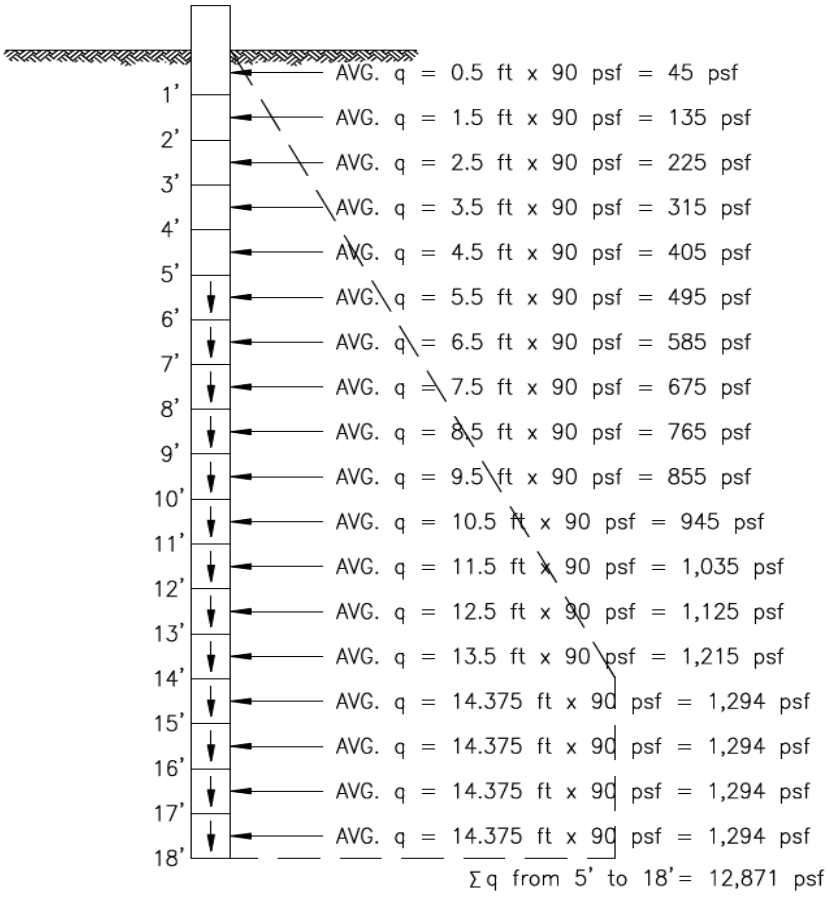

$Q_f = \mathbf{S}(q \times K \times TAN\ (fa') \times p \times D \times dL)$

$Q_f = 12{,}871 \times 1.0 \times 0.25 \times 3.14 \times 8.625/12$

$Q_f = 7{,}266$ lbs

Example 2: Given an 8 ⅝" OD pile shaft is installed 18 feet into the soft clay having an adhesion value of 350 psf, determine the friction resistance between the shaft and the soil (consider that the water table never rises above 100 feet below the surface).

Solution: $Q_f = \mathbf{S}(C_a \times (p \times D_p) \times dL)$

$Q_f = 350 \times (3.14 \times 8.625/12) \times (18\text{-}5)$

$Q_f = 10{,}274$ lbs

VII. Column Buckling

In 1757 the mathematician Leonard Euler solved the expression for the critical compression load $\mathbf{P_{cr}}$ which could be applied to a column just prior to the column buckling.

Euler Buckling Load Formula:

$$P_{cr} = \frac{\pi^2 EI}{KL_u^2}$$

where: P_{cr} = Critical buckling load of the column (Pounds)

E = Modulus of Elasticity of the column material
(for steel, E = 29,000,000 psi)

I = Minimum Moment of Inertia of the column (inches^4)

K = A Constant (See Chart Below)

L_u = Unbraced Length (in)

The Euler Buckling Formula is used for long columns which do not have any lateral support. Long columns are defined by the formula below:

$$(KL_u/r) \geq \sqrt{\frac{2\pi^2 E}{F_y}}$$

where: r = radius of gyration (in.)

F_y = Yield Strength of the material (psi)

For columns having a slenderness ratio $(KL_u/r) < \sqrt{\frac{2\pi^2 E}{F_y}}$, the Column Research Council (CRC) Formula shown below is used.

$$P_{cr} = \left(\frac{(1-(KLu/r)^2}{2C_c^2} \right) \times F_y \times \text{Area}$$

where: $C_c = \sqrt{\frac{2\pi^2 E}{F_y}}$

Buckled shape of column shown by dashed line	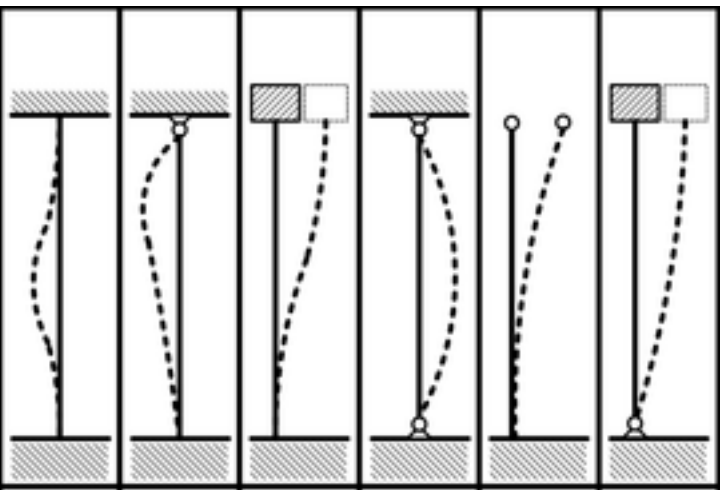					
Theoretical K value	0.5	0.7	1.0	1.0	2.0	2.0
Recommended design value K	0.65	0.80	1.2	1.0	2.10	2.0
End condition key	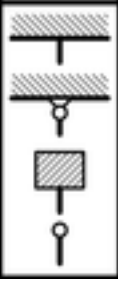	Rotation fixed and translation fixed Rotation free and translation fixed Rotation fixed and translation free Rotation free and translation free				

EFFECTIVE LENGTH FACTOR, K

The Euler and CRC Formulas above are only used for determining column buckling on the helical shaft when the shaft is not laterally supported; specifically, helical shafts which are surrounded by air, water or highly disturbed soils.

The Davisson Method can be used to calculate the critical buckling load $\mathbf{P_{cr}}$ for helical shafts surrounded by soil. There are several criteria which must be considered when using the Davisson Method:

1. The helical pile shaft is perfectly straight
2. The only load on the pile is an axial load, no lateral loads or bending moments are applied

3. The axial load is resisted by the helices, skin friction does not resist any of the axial load
4. Throughout the length of the pile the Modulus of Subgrade Reaction (K_h) is constant

Davisson's equation for the critical buckling load $\mathbf{P_{cr}}$ is shown below:

$$P_{cr} = U_{cr} \times \left(\frac{E\,I}{R^2} \right)$$

where: U_{cr} = A dimensionless factor, recommended conservative default value = 2.0 (see chart below)

$$R^4 = \frac{EI}{K_h \times d}$$

K_h = Modulus of Subgrade Reaction (pounds/cu. in.)
See Table below for range of values

d = Pile Diameter (in.)

$I_{max} = L_u / R$ (Maximum Moment of Inertia)

Range of Values of Modulus of Subgrade Reaction, K_h

Soil	K_h (pounds/cu. in)
Loose Sand	15 – 20
Soft Clay	20 – 70
Very Soft Clay	10 - 20

Typically, buckling does not occur when the **ASTM D 1586 SPT N** value is > 4. The loose sand and soft to very soft clay shown in the chart above would have an **N** value ≤ 4, and therefore column buckling should be checked using the Davisson Method.

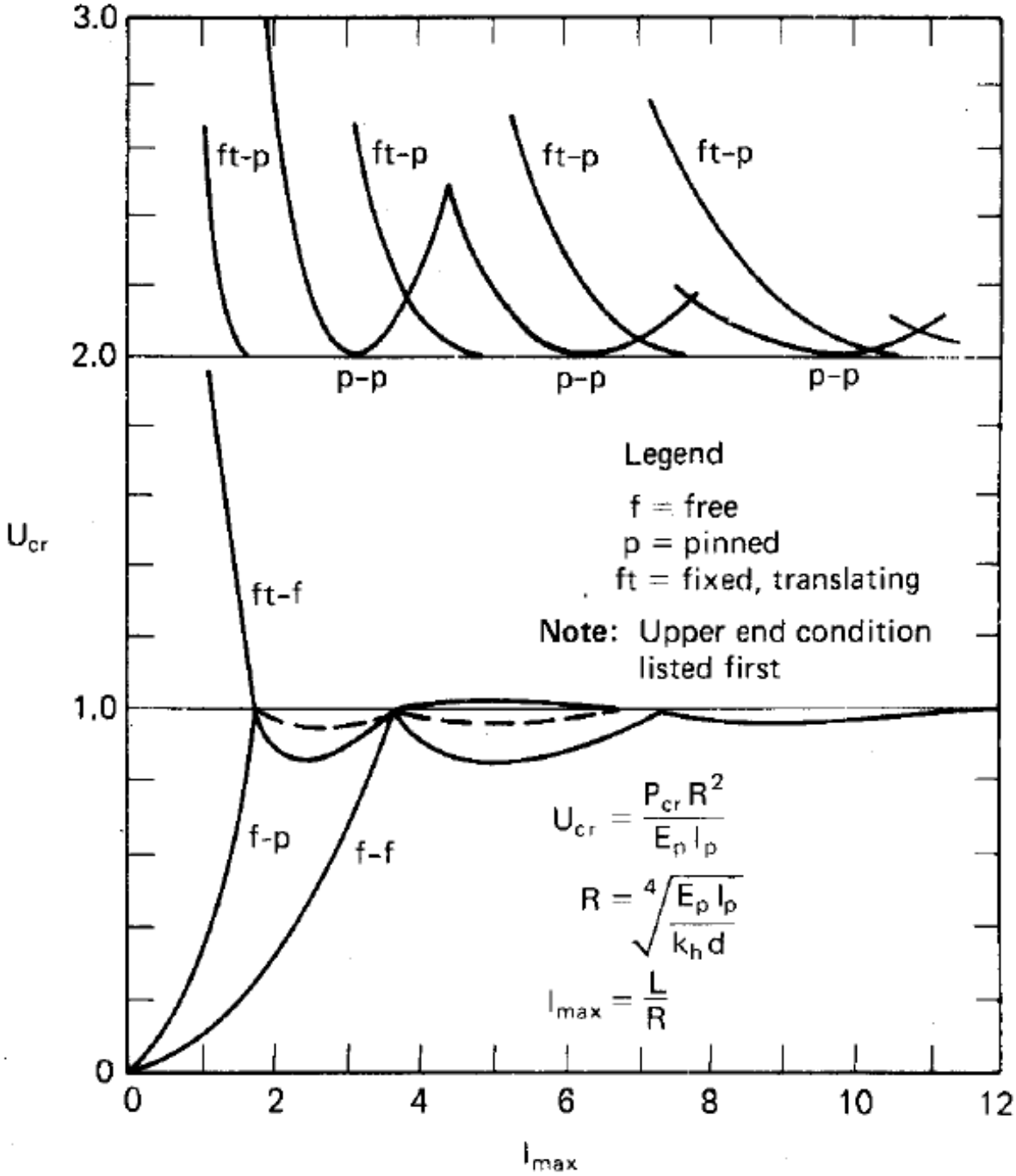

<u>Example 3:</u> A 1.50 in. Round Cornered Square (RCS) shaft helical pile has been installed to a depth of 30 feet. The top 20 feet of soil is very soft clay and has a SPT N value of 2 to 3, while the soil below the 20 foot depth has a SPT N – value of 5 or greater. Using the Davisson Method, determine the critical buckling load $\mathbf{P_{cr}}$ and allowable design load using a Factor of Safety of 2.0.

$$P_{cr} = U_{cr} \times \left(\frac{E\,I}{R^2} \right)$$

$U_{cr} = 2.0$

$E = 29{,}000{,}000$ psi

$I = 0.396\ in^4$

$d = 1.50$ in

$K_h = 10$ (Using most conservative value from table above)

$$R^4 = \frac{EI}{Kh \times d}$$

or

$$R^4 = \frac{29{,}000{,}000 \times 0.396}{10 \times 1.50} = 765{,}600$$

$R^2 = 875$, therefore $R = 29.6$

$I_{max} = L_u / R = (20\ ft \times 12\ ^{in}/_{ft}) / 29.6 = 8.1\ in^4$

Therefore: $P_{cr} = 2.0 \times 29{,}000{,}000 \times 0.396 / 875.0 = 26{,}250$ pounds
Using a Factor of Safety of 2.0, the design load = 13,125 pounds.

Note that with U_{cr} held as a constant that only K_h, not the pile length L_u, governs the critical buckling load P_{cr}.

VIII. Lateral Capacity

Helical piles are often subjected to lateral loads, therefore, a method for calculating the capacity of a laterally loaded pile is needed. Consider the laterally loaded helical pile in the figures below:

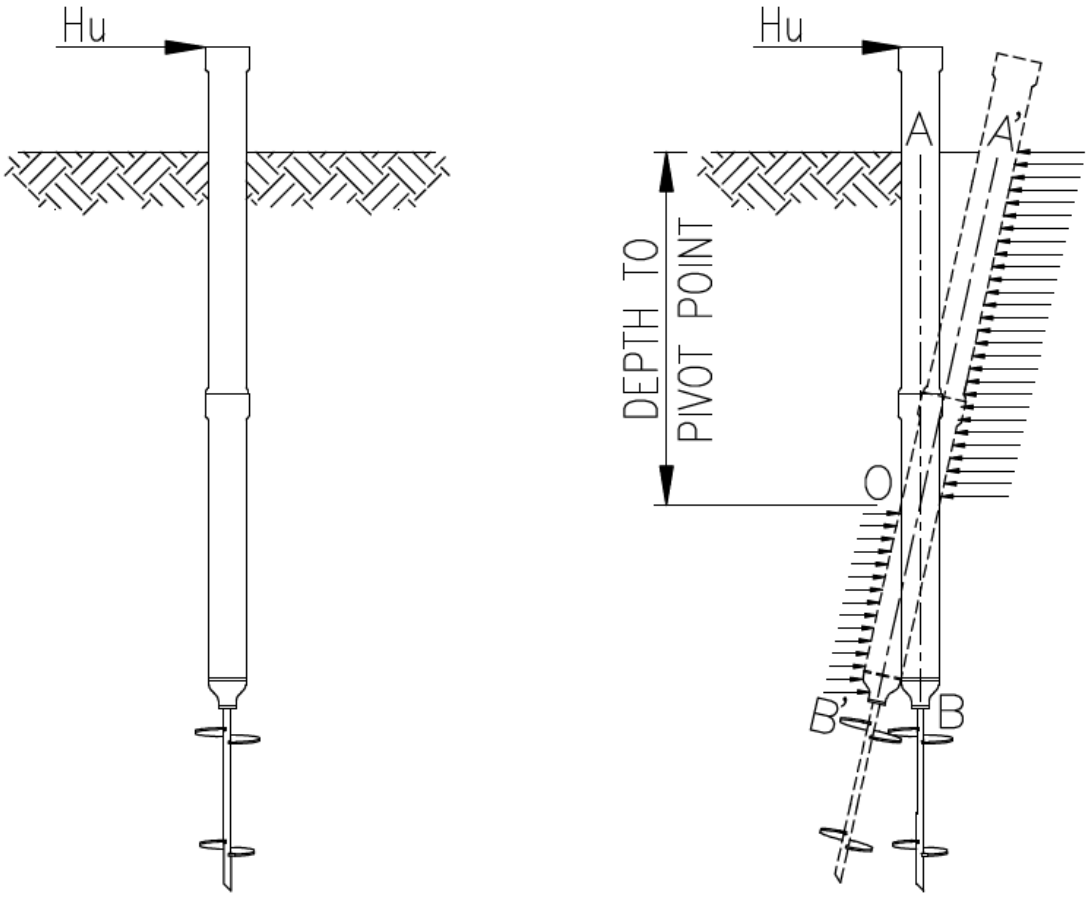

As the lateral load is applied to the top of the helical pile, the pile begins to pivot about Point O slightly as shown. The soil between A' and O applies a resistance load in the opposite direction to the lateral load H_u, and the soil between B' and O applies a resistance load in the same direction of the lateral load H_u. The diagram shown above is the basis for the development of Broms Method for Short Free-Headed Piles. Broms Method may be used to evaluate the lateral capacity for short free-headed helical piles in cohesive and non-cohesive, homogeneous soils.

Fundamentals of Helical Anchors/Piles

A SunCam online continuing education course

Broms Method for Short Free-Headed Piles In Cohesive Soils

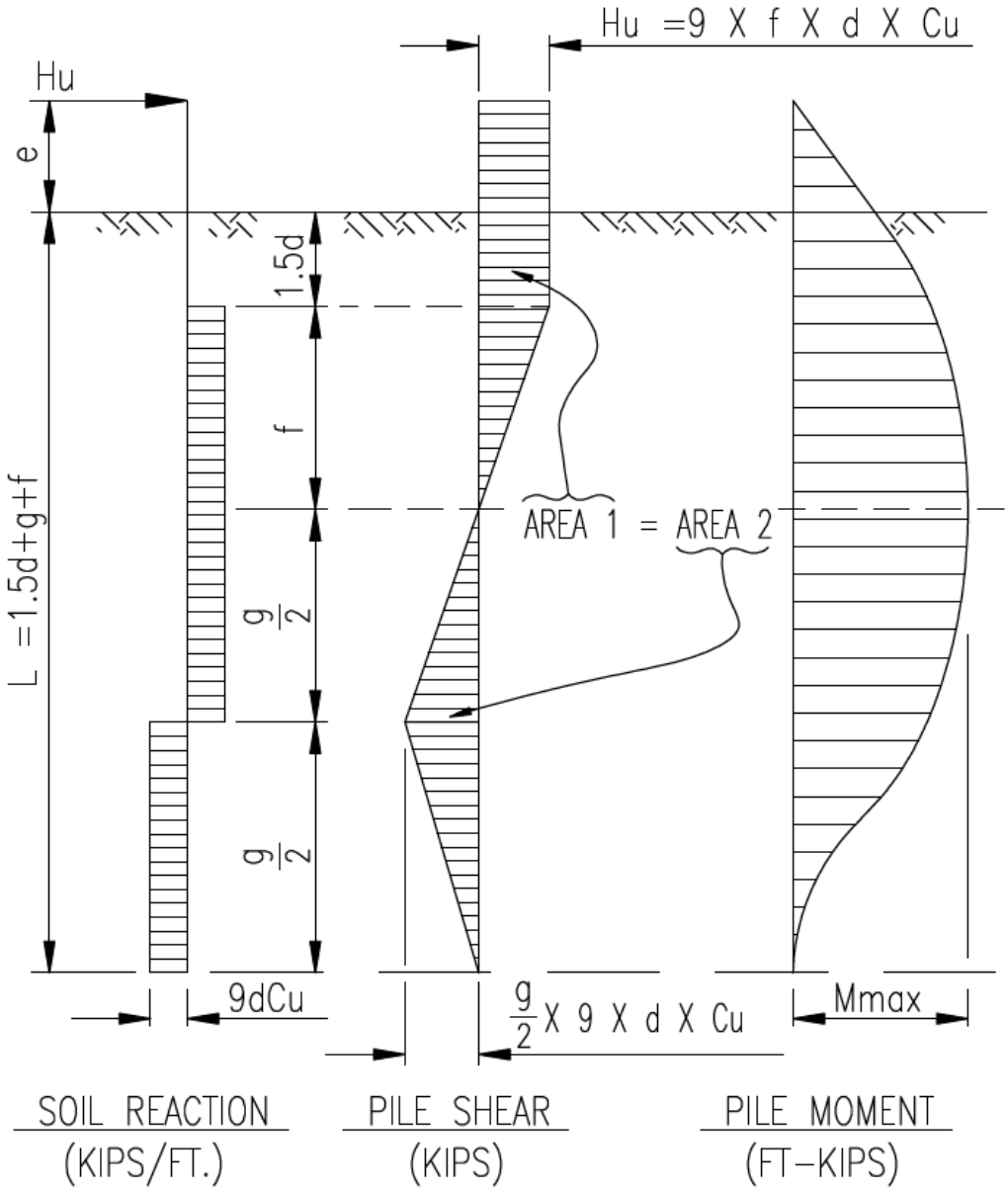

Recommended Units:

Dimensions f & g (FT)

d = Pile Dia. (FT.)

H_u = Lateral Load (Kips)

C_u = Soil Cohesion (Kips/FT^2)

M_{max} = Maximum Pile Bending Moment (FT-Kips)

F_b = Maximum Pile Bending Stress (KSI)

The shear at the depth 1.5d + f = 0, therefore, f **x** $9dC_u = H_u$

or f = H_u**/**$9dC_u$

AREA 1 = (H_u **x** (e + 1.5d)) + 0.5 **x** f **x** H_u

AREA 2 = 1/2 g **x** g/2 **x** $9dC_u$

= 2.25 **x** g^2 **x** dC_u

$$g = = \sqrt{\frac{H_u(e+1.5d+0.5f)}{2.25dC_u}}$$

M_{max} = H_u **x** (e + 1.5d + 0.5f)

knowing the values of f, g & C_u, the required length L for Cohesive Soils can be determined by the equation L = 1.5d + f + g

<u>Example 4:</u> An 8⅝"Ø **x** 10 foot pile shaft is installed in clay with a cohesion value of 1 kip/ft^2 and a water table depth of 6 feet. There is an ultimate lateral load of 9 kips applied 1 foot above the ground surface. Is the 10 foot extension length long enough to resist the lateral load? And what is the maximum bending stress F_b in the pile?

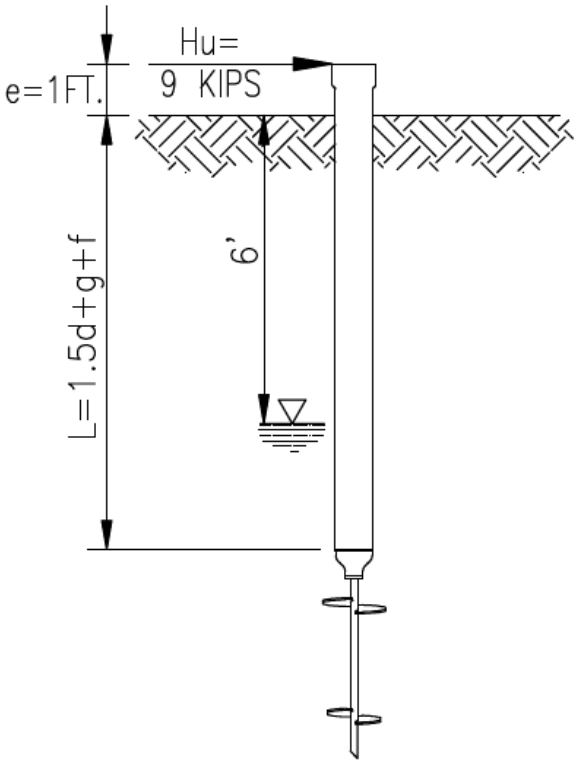

PILE PROPERTIES
O.D. = 8.625 in.
WALL THK. = 0.188 in.
I. D. = 8.249 in.
I = 44.361 in^4
A = 4.983 in^2
Fy =50,000 psi
My = 42.861 FT-KIPS

THE ULTIMATE MOMENT CAPACITY OF THE PILE = My

& $My = \frac{\sigma I}{c} = \frac{50{,}000 \times 44.361}{(8.625/2)}$

or My= 512,330 in-lbs

or My= 42.861 FT-LBS

H_u = 9 KIPS
e = 1 FT.
d = 8.625 in. = 0.719 FT.
C_u = 1 kip/ft^2
therefore, f = Hu/9dCu = 9/(9 **x** 0.719 **x** 1) = 1.39 FT.

and $g = \sqrt{\frac{H_u*(e+1.5d+0.5f)}{2.25*dC_u}}$

$$g = \sqrt{\frac{9*((1+1.5*0.719)+(0.5*1.39))}{2.25*0.719*1}}$$

g = 3.93 FT.

The required length L = 1.5d+f+g = (1.5 **x** 0.719)+1.39+3.93 = 6.40 FT.

M_{max}= H_u**x**(e+1.5d+0.5f)=9**x**(1+(1.5**x**0.719)+(0.5**x**1.39))=24.96 FT-KIPS

The maximum bending stress F_b in the pile = $\frac{M_{max} \ \mathbf{x} \ (O.D./2)}{I}$

Therefore, $F_b = \frac{24.96 \ \mathbf{x} \ 12{,}000 \ \mathbf{x} \ (8.625/2)}{44.361}$ = 29,117 psi

The embedment length of the pile extension is 9 feet, which is greater than the required length of 6.4 feet. The maximum bending stress Fb in the pile is 29,117 psi, which is less than the Fy value of 50,000 psi. The pile is adequate for the 9 kip lateral loading.

Broms Method for Short Free-Headed Piles In Non-Cohesive Soils

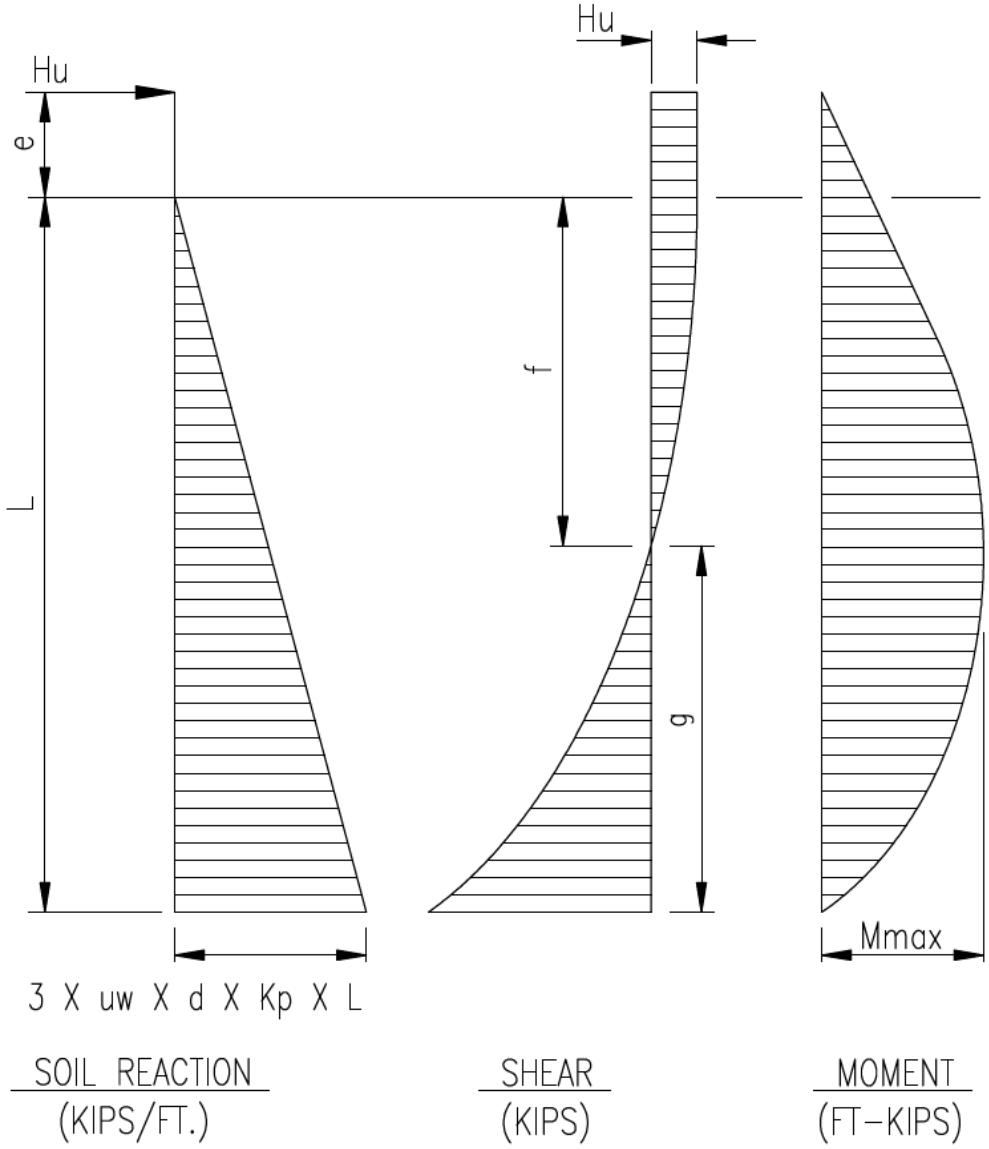

Recommended Units:

uw – Effective Unit Weight of Soil (KIPS/FT^3)

K_p = Coefficient of Passive Earth Pressure = $\tan^2(45° + [\Phi/2])$

Φ =Soil's Angle of Internal Friction (Degrees)

Sum of Reaction Vectors = $\sum R$

$$\sum R = 3 \times uw \times d \times K_p \times \int_0^L y\, dy$$

$$\sum R = 3/2 \times uw \times d \times K_p \times L^2$$

The sum of reaction vectors at any depth y = $\sum r$

$$\sum r = 3/2 \times uw \times d \times K_p \times y^2$$

The depth of the maximum bending moment = f

$$H_u = 3/2 \times uw \times d \times K_p \times f^2$$

therefore, $f = 0.8165 \times \sqrt{\dfrac{H_u}{uw \times d \times K_p}}$

Summing moments about toe of soil reaction polygon yields

$$H_u \times (e + L) = (3/2 \times uw \times d \times K_p \times L^2) \times \frac{L}{3}$$

$$H_{u\,max} = \frac{0.5 \times uw \times d \times Kp \times L^3}{e + L}$$

Solving for L_{min} results in obtaining the solution to a cubic equation

$$0 = 0.5 \times uw \times d \times Kp \times L^3 - H_u \times L - H_u \times e$$

The bending moment = Area under shear curve, and the maximum bending moment M_{max} = Area under shear curve at depth "f"

$$M_{max} = \int_0^e H_u \, dy + \int_0^f H_u - 3/2 \times uw \times d \times Kp \times y^2 dy$$

$$M_{max} = H_u \times y]_0^e + H_u \times y - 3/2 \times uw \times d \times Kp \times \frac{y^3}{3}\Big]_0^f$$

$$M_{max} = H_u \times (e + \tfrac{2}{3} f)$$

The moment at any location on the pile is:

$$M = (H_u \times e) + ((H_u \times y) - (0.5 \times uw \times d \times Kp \times y^3))$$

In example 4, the ground water table was located 6 feet below the ground surface, which placed the bottom portion of the pile below the ground water table and the top portion of the pile above the ground water table. The analysis of laterally loaded piles using Broms Method for cohesive soils is not affected by the location of the water table. However, the analysis of laterally loaded piles using Broms Method for non-cohesive soils is affected by the location of the water table. For non-cohesive soils, the location of the water table is either at the ground surface or below the bottom of the pile depth considered to resist the lateral loading.

<u>Example 5:</u> An 8⅝"Ø **x** 10 foot pile shaft is installed in sand which has a Φ value of 30°, a unit weight of 110 pcf and the water table depth is 12.5 feet. The ultimate lateral load of 6 kips is applied 1 foot above the ground surface. Is the 10 foot extension length long enough to resist the lateral load? And what is the maximum bending stress F_b in the pile?

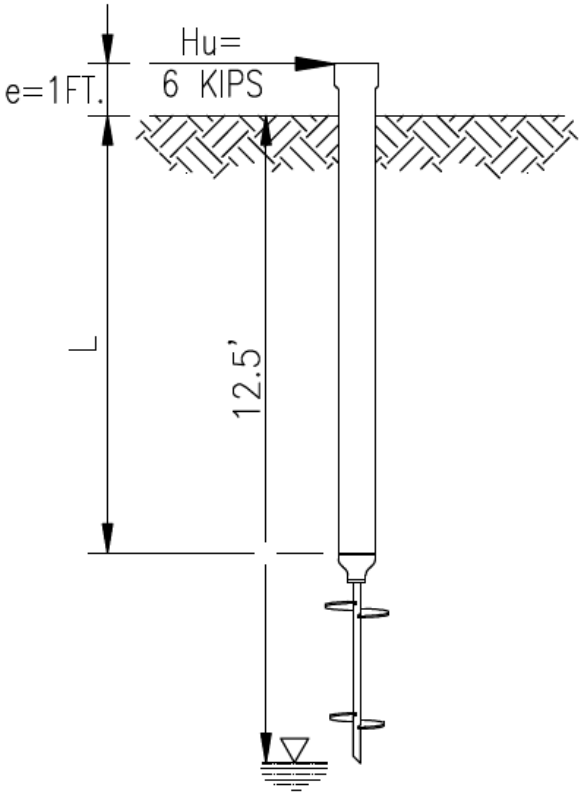

PILE PROPERTIES
O.D. = 8.625 in.
WALL THK. = 0.188 in.
I. D. = 8.249 in.
I = 44.361 in^4
A = 4.983 in^2
Fy =50,000 psi
My = 42.861 FT-KIPS

THE ULTIMATE MOMENT CAPACITY OF THE PILE = My

& $My = \frac{\sigma I}{c} = \frac{50{,}000 \times 44.361}{(8.625/2)}$

or My= 512,330 in-lbs

or My= 42.861 FT-LBS

H_u = 6 KIPS
e = 1 FT.
d = 8.625 in. = 0.719 FT.
$\Phi = 30°$
uw = 110 pcf = 0.11 kcf

$K_p = \tan^2(45° + [30°/2]) = 3.0$

Solving for L_{min} using $0 = 0.5 \times uw \times d \times K_p \times L^3 - H_u \times L - H_u \times e$

$0 = (0.5 \times 0.11 \times 0.719 \times 3.0) \times L^3 - 6 \times L - 6 \times 1$

$0 = 0.119 \times L^3 - 6 \times L - 6$

L_{min} = 7.57 FT.

Using the actual pile embedment length of 9 feet, the ultimate lateral capacity is:

$$H_{u\ max} = \frac{0.5 \text{ x uw x d x Kp x } L^3}{e + L}$$

$$H_{u\ max} = \frac{0.5 \text{ x } 0.11 \text{ x } 0.719 \text{ x } 3.0 \text{ x } 9^3}{1 + 9}$$

$H_{u\ max}$ = 8.65 KIPS

The depth of the maximum pile bending moment for the 6 kip load is:

$$f = 0.8165 \text{ x } \sqrt{\frac{H_u}{uw \text{ x } d \text{ x } K_p}}$$

$$f = 0.8165 \text{ x } \sqrt{\frac{6}{0.11 \text{ x } 0.719 \text{ x } 3.0}}$$

f = 4.11 FT.

The maximum pile bending moment for the 6 kip load is:

$M_{max} = H_u$ **x** (e + ⅔ f)

M_{max} = 6 **x** (1 + ⅔ **x** 4.11)

M_{max} = 22.44 FT-KIPS

The maximum bending stress F_b in the pile = $\frac{M_{max} \text{ x } (O.D./2)}{I}$

Therefore, $F_b = \dfrac{22.44 \text{ x } 12{,}000 \text{ x } (8.625/2)}{44.361} = 26{,}178$ psi

The embedment length of the pile extension is 9 feet, which is greater than the required length of 7.57 feet. The maximum bending stress F_b in the pile is 26,178 psi, which is is less than the Fy value of 50,000 psi. The pile is adequate for the 6 kip lateral loading.

IX. Advantages of Helical Anchor/Piles

Every project has its own set of unique factors that determine the most acceptable foundation system. Outlined below are a number of considerations where helical anchors/piles present a more desirable solution.

• The installation equipment for drilled piers, driven piles, and auger cast piles are generally much heavier and more specialized than that required for helical piles. The same is true regarding the cost of mobilization, which is generally much more expensive than that for helical piles. The type of equipment shown in the photo below is typically of helical pile installation equipment.

• The installation of helical pile foundations are virtually vibration free, thereby allowing installation near existing structures, and noise levels are sufficiently low as not to be an issue for populated areas.

• Onsite Quality Control by applying the torque vs. capacity relationship, the ultimate theoretical capacity of the pile can be determined at the time of its installation.

• The installation of screw pile foundations does not create spoils. This eliminates the time and cost associated with spoil removal and disposal.

• Soft surface soils or flooded conditions do not prevent efficient installation of helical piles.

• Poor weather does not deter the installation of helical piles.

• Helical piles can easily be removed by reversing the installation process, making removal of temporary piles simple.

• Piles can be loaded immediately upon completion of installation.

